Project no.:
226317

Project acronym:
CO2EuroPipe

Project title:
Towards a transport infrastructure for large-scale CCS in Europe

Collaborative Project

Start date of project: 2009-04-01
Duration: 2½ years

D4.3.1
WP4.3 Report
Kårstø offshore CO_2 pipeline design

Revision: 0

Organisation name of lead contractor for this deliverable:
Gassco AS

Project co-funded by the European Commission within the Seventh Framework Programme		
Dissemination Level		
PU	Public	PU
PP	Restricted to other programme participants (including the Commission Services)	
RE	Restricted to a group specified by the consortium (including the Commission Services)	
CO	Confidential , only for members of the consortium (including the Commission Services)	

Deliverable number:	D4.3.1
Deliverable name:	Kårstø offshore CO_2 pipeline design
Work package:	WP 4.3 Kårstø, Norway
Lead contractor:	Gassco

Status of deliverable		
Action	**By**	**Date**
Submitted (Author(s))	Ref. author list below	25.05.2011
Verified (WP-leader)	Sigve Apeland	25.05.2011
Approved (SP-leader)	Filip Neele	06.07.2011

Author(s)		
Name	**Organisation**	**E-mail**
Sigve Apeland	Gassco	sa@gassco.no
Stefan Belfroid	TNO	stefan.belfroid@tno.nl
Stijn Santen	CO2-Net	stijn.santen@co2-net.com
Carl-W. Hustad	CO2-Global	cwh@co2-global.com
Michael Tetteroo	AV	mtetteroo@anthonyveder.com
Klaus Klein	Siemens	klaus.kk.klein@siemens.com

Abstract
This report describes a case study of transport of 1, 3 and 5 Mt/yr CO_2 from Kårstø to offshore storage in the Utsira saline formation on the Norwegian Continental Shelf. Both pipeline and ship transport is analysed. Description of technical solutions and cost estimates are provided.

EXECUTIVE SUMMARY

The CO2EuroPipe project, partially funded by the European Union, discusses and describes the main issues related to a large-scale, Europe-wide infrastructure for transport of CO_2, including technical, organisational, financial, legal, environmental and social aspects. The current report describes a case study, where CO_2 is transported in a pipeline from Kårstø at the western coast of Norway, to permanent storage in the Utsira saline aquifer on the Norwegian Continental Shelf. Parts of the report is based on a project performed by Gassco on behalf of the Norwegian Ministry of Petroleum and Energy, where a 12" pipeline has been evaluated for such transport of CO_2.

In addition to a general approach to CO_2 transport, case studies should be performed to evaluate how generic principles, technical alternatives and cost assumptions can be materialised into specific transportation systems, designed for a particular purpose. In other reports published by the CO2EuroPipe project, general approaches are being made to establish basic knowledge that may be used to analyse particular systems. The value of generic information is fundamental; the case studies, of which the current report describes one, may be used to illustrate particular aspects and to give examples of how specific system assumptions result in technical solutions and cost estimates.

Any case study will have more limited relevance than generic knowledge, since assumptions of the results are made within the study narrowing down the generality. In the Kårstø case study presented in this report, main limitations are made with respect to volume basis and transport alternatives. The latter is due to the fact that transport is limited to offshore transport, thus making the results of limited value for onshore CO_2 transport studies.

Within these limitations, however, an extensive analysis of the transport alternatives and the technical systems used as basis for design have been performed. For the volume alternatives (1, 3 and 5 Mt/yr) both pipeline transport and ship transport have been analysed and described in significant detail. The work is partly based on previous studies performed by the participating companies, that are relevant for the Kårstø case study, and partly based on work performed within CO2EuroPipe specifically. The result should give a good insight into the solutions chosen as basis for the case study.

For pipeline transport, 8", 12" and 16" pipeline systems have been designed to match the volume basis. The design includes analysis of pipeline dimensioning, pipeline routing, offshore pipeline installation method, landfall design, onshore pipeline system design and compressor design. In addition, principles related to functional and operational requirements are specified.

For ship transport, vessels for 3000, 6000 and 30 000 m³ capacity are described, together with related onshore systems for liquefaction and compression, intermediate storage and loading systems. Offloading systems at the offshore storage sites are also briefly discussed.

Both for pipeline and ship transport the technology is available for large scale CO_2 transport, even if some R&D activities still needs to be performed to optimise design and thus also reduce costs (small scale CO_2 transport by ship and large scale CO_2

transport onshore are already in operation). This is further described in Section 3. Work is ongoing for these issues, which are not assumed to represent showstoppers for CCS projects.

The cost summary for the cases analysed in this report is further detailed in this report, and summarised in the below table. The accuracy of the cost elements is assumed to be in the range of +/-25% to +/-40%. In general, the cost estimates related to the pipeline alternatives are assumed to be more mature than the estimates for the ship alternative given the lack of detailed design data and as such the conceptual nature of these estimates.

Recommendations

The Kårstø case project is sufficient matured to demonstrate that offshore pipelines for CO_2 transport can be installed and put in operation based on existing technology. It is recommended to continue focus on R&D activities in some areas like corrosion effects from impurities in the CO_2 stream, accuracy of simulation tools, use of soft materials, noise levels during depressurization and risk of longitudinal fractures to increase knowledge and to optimise design and reduce cost. Such R&D activities should be performed in close cooperation between companies that are potential future operators of CO_2 pipelines, national and international R&D institutes and regulators of future CO_2 transport systems.

Transporting CO_2 by ship to onshore offloading is feasible based on existing technology. Some issues related to offshore offloading remain to be developed and tested. It is recommended that a technology qualification process should be performed, e.g. as part of a demonstration project, to demonstrate a reliable solution.

No Norwegian CO_2 capture projects have been matured to a level necessitating terms and conditions for transporting the CO_2 in pipelines or on ships. Hence commercial terms for the Kårstø case have not been developed. The Norwegian upstream natural gas transportation regime could form the basis for transportation of third party CO_2.

Table 0-1 Cost summary for the Kårstø case

	Ship transport				**Pipeline transport**			
Volume basis (Mt/yr)	NPV CAPEX	NPV OPEX	NPV Total	NPV Total / NPV volume	NPV CAPEX	NPV OPEX	NPV Total	NPV Total / NPV volume
1	141	174	315	27	242	86	329	28
3	264	356	620	18	359	253	612	17
5	343	572	915	16	413	388	801	14

Calculated average unit costs are further illustrated in the below figure.

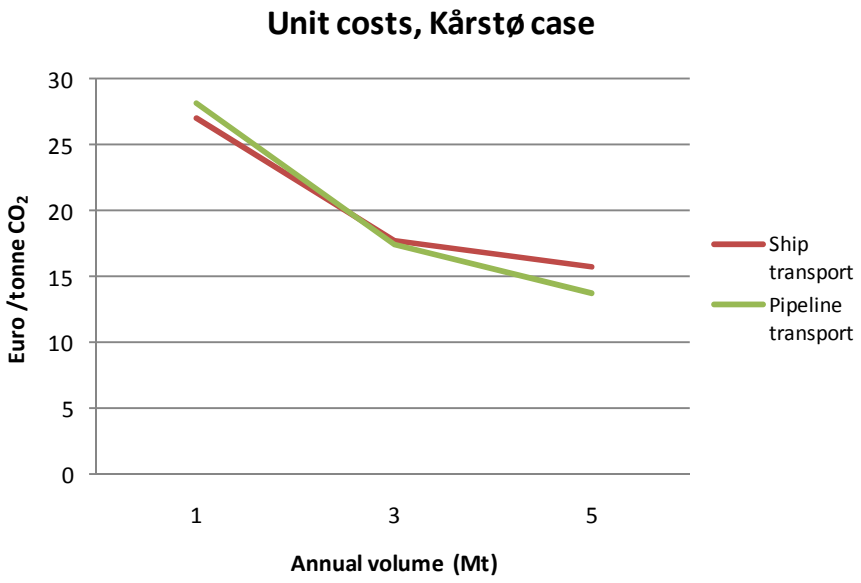

Figure 0-1 Unit cost summary, Kårstø case

PROJECT SUMMARY

The CO2EuroPipe project aims at paving the road towards large-scale, Europe-wide infrastructure for the transport and injection of CO_2 captured from industrial sources and low-emission power plants. The project, in which key stakeholders in the field of carbon capture, transport and storage (CCTS) participate, will prepare for the optimum transition from initially small-scale, local initiatives starting around 2010 towards the large-scale CO_2 transport. Indeed, storage must commence from 2015 to 2020, if near- to medium-term CCS is to be effectively realized. This transition, as well as the development of large-scale CO_2 infrastructure, will be studied by developing business cases using a number of realistic scenarios. Business cases include the Rotterdam region, the Rhine-Ruhr region, an offshore pipeline from the Norwegian coast and the development of CCS in the Czech Republic and Poland. The present report describes the offshore pipeline from the Norwegian coast, providing insight into a detailed design of a highly realistic transport and storage project.

The project has the following objectives:

1. describe the infrastructure required for large-scale transport of CO_2, including the injection facilities at the storage sites;
2. describe the options for re-use of existing infrastructure for the transport of natural gas, that is expected to be slowly phased out in the next few decades;
3. provide advice on how to remove any organizational, financial, legal, environmental and societal hurdles to the realization of large-scale CO_2 infrastructure;
4. develop business case for a series of realistic scenarios, to study both initial CCS projects and their coalescence into larger-scale CCS infrastructure;
5. demonstrate, through the development of the business cases listed above, the need for international cooperation on CCS;
6. summarise all findings in terms of actions to be taken by EU and national governments to facilitate and optimize the development of large-scale, European CCS infrastructure.

Project partners

Nederlandse Organisatie voor Toegepast Natuurwetenschappelijk Onderzoek- TNO	Netherlands
Stichting Energieonderzoek Centrum Nederland	Netherlands
Etudes et Productions Schlumberger	France
Vattenfall Research & Development AB	Sweden
Gasunie Engineering BV	Netherlands
Linde Gas Benelux BV	Netherlands
Siemens AG	Germany
RWE DEA AG	Germany
E.ON Benelux NV	Netherlands, Belgium, Luxemburg
PGE Polska Gruppa Energetyczna SA	Poland
CEZ AS	Czech Republic
Shell Downstream Services International BV	Netherlands, United Kingdom
CO2-Net BV	Netherlands
CO2-Global AS	Norway
Nacap Benelux BV	Netherlands
Gassco AS	Norway
Anthony Velder CO_2 Shipping BV	Netherlands

E.ON New Build & Technology Ltd	United Kingdom
Stedin BV	Netherlands

The CO2EuroPipe project is partially funded by the European Union, under the 7th Framework program, contract n° 226317.

TABLE OF CONTENTS

Page

1 INTRODUCTION

The purpose of this document is to describe the results from the work performed for the Kårstø case in the Work Package 4.3 (WP4.3) within the CO2EuroPipe project. This project is described below (Section 1.1); the objectives of this part of the project are described in Section 1.2.

1.1 Background

CO2EuroPipe is a defined project within EU's 7th framework program supported and partly funded by the European Commission. This project aims at paving the road towards a large-scale, pan-European infrastructure for the transport and injection of CO_2. The project will identify barriers and present scenarios for the optimum transition from initial small-scale, local initiatives towards large-scale CO_2 transport and storage that is proposed to start around 2020, with key stakeholders in the field of carbon capture, transport and storage. This transition, as well as development of the CO_2 infrastructure is being studied by identifying relevant business cases using a number of realistic scenarios. The project will result in a roadmap for CO_2 transportation, with 2020 as the target year for start of large-scale CCS in Europe. The roadmap will be defined for multiple levels considered in the project, ranging from technical to organizational, financial and societal.

One of the work packages (WP4.3) of the CO2EuroPipe project has as an objective the task of describing transport systems for 2 cases;

- A technical solution for long-length (i.e. more than 200 km) subsea pipeline transport of CO_2 (for 1 to 5 Mt/yr) from source to geological permanent storage, with focus on:
    - Differences between gas and CO_2 transport, e.g. related to hydraulic flow calculations, stability analysis and temperature effects.
    - Analysis of relationship between costs and capacity effects from alternative pipeline dimensions.
- A technical case for a transport system for larger volumes (typically 20 Mt/yr) from Continental Europe, UK and Norway to underground storage in the Utsira saline aquifer formation, with focus on:
    - Optimisation of system configuration – which principles should be used for development of such a system, taking into consideration:
        - Need for long term optimal solutions both with respect to technical configuration and overall costs
        - Likely development of such a system over time, i.e. it is not likely that the overall system will be implemented in one go, but will develop over time
    - Technical challenges related to pipeline transport of larger volumes of CO_2 over longer distances (500+ km).

This document is related to the first of these cases, i.e. the Kårstø case. The starting point for the case will be the work initiated by the Norwegian Ministry of Petroleum and Energy (MPE), and performed by Gassco on behalf of MPE related to such a transport solution. The concept comprises a CO_2 pipeline from Kårstø on the western coast of Norway to a dedicated storage location in the Utsira saline formation in the Norwegian Continental Shelf (NCS). The CO_2 will be injected via a subsea template, where the CO_2 pipeline is entering the template structure without any conditioning of the CO_2 other than potential pressure reduction facilities.

Alternative volume flow rates are evaluated (from 1 to 5 Mt/yr, given 8000 hrs/year). Sources for the CO_2 are not defined within this project, but could be the gas fired power plant at Kårstø, the gas treatment terminal at Kårstø and/or other sources in the region. It could also be CO_2 transported to Kårstø from other locations, either by ship or by pipeline, to the defined upstream battery limit, see further below for a definition.

Both pipeline and ship transport is evaluated in this report, for all volume alternatives. The obvious purpose would be to give examples of which may be the preferred and cost effective solution for such volume alternatives.

1.2 Objectives

Within the limited resources related to the work within WP4.3, there is no possibility of performing complete engineering of the defined cases. However, as part of previous work performed by Gassco in the period 2006 to 2009, various transport alternatives for pipeline transport of CO_2 from Kårstø to geological storage in the Utsira formation in the NCS have been evaluated. The cost estimates for these alternatives have uncertainty levels varying from ±40% to ±20%. By using the results from this work as a starting point for the work within WP4.3, representative results can be obtained for the cases described in this document.

The costs for the shipping scope will be represented in an EUR/ton element that covers both the CAPEX and OPEX component of the costs, accuracy will be in the +/- 40% range.

For the pipeline. the overall objective of the work is to establish cost estimates with uncertainty levels being within ±30 In this case, the project results have not been derived following specific engineering, but rather based on relevant engineering from similar projects. Thus, the uncertainty level for the Kårstø case (±30%) represents the participants' best judgment of the maturity of the overall project results.

1.3 Abbreviations

The following abbreviations are used throughout this document:

CO_2	Carbon Dioxide
DP	Dynamic Positioning (for ship)
EIA	Environmental Impact Assessment
ESDV	Emergency Shut Down Valve
EUR	Euro (€)
HSE	Health, Safety and Environment
HVLP	High Volume Low Pressure (pump)
ID	Inner diameter
KP	Kilometre post
LVHP	Low Volume High Pressure (pump)
LPG	Liquified Petroleum Gas
MPE	Norwegian Ministry of Petroleum and Energy
MSL	Mean Sea Level
MSm^3/d	Million standard cubic metres per day
Mt/yr	Million tonnes per year
NCS	Norwegian Continental Shelf
OD	Outer diameter
P	Pressure
PLET	Pipeline End Termination
RFO	Ready For Operation
WHD	Well head

2 BASIS FOR THE WORK

In this section a description is given of the elements and assumptions used to establish cost estimates for the alternative systems.

2.1 Kårstø

Sources for CO_2 throughout Europe is evaluated in a previous CO2Europipe report [*D2.2.1*]. In this case study one of the relevant areas for CO_2 capture have been used as a starting point, namely Kårstø in the western Norway.

Kårstø is located on the western part of Norway, approximately mid-way between Stavanger and Bergen. Since 1985, one of the world's most complex processing plants for treatment of rich gas has been situated here. Gassco is the formal Operator of the plant, which alone supplies Europe with up to ~70 MSm^3/d dry gas, which e.g. corresponds to 40% of the average consumption in France. Located at the same area is also Norway's only commercial gas fired power plant, operated by Naturkraft, see the figure below.

Figure 2-1 Kårstø processing plant and Naturkraft gas fired power plant (right-most in the picture). Source: Gassco

Under continuous and normal operations, a total of approximately 2.4 Mt/yr of CO_2 is emitted from Kårstø, approximately evenly distributed between the gas fired power plant and the gas terminal, respectively.

In the proximity of Kårstø is an aluminium plant, operated by Hydro. In addition, early phase plans for establishment of industry implying increased emissions of CO_2 are under evaluation by several industry partners.

In total, this constitutes the potential basis for the volume alternatives discussed in this report.

2.2 Design basis

The design basis for the Kårstø case is given in Section A1. The CO_2 stream is assumed to enter the transportation system at 1 bara and at a maximum temperature of 50ºC. At the storage site, the CO_2 is assumed to exit the transportation system at the inlet of a subsea template structure facilitating the manifold system for the injection wells into the geological structure, see the below figure for a typical configuration.

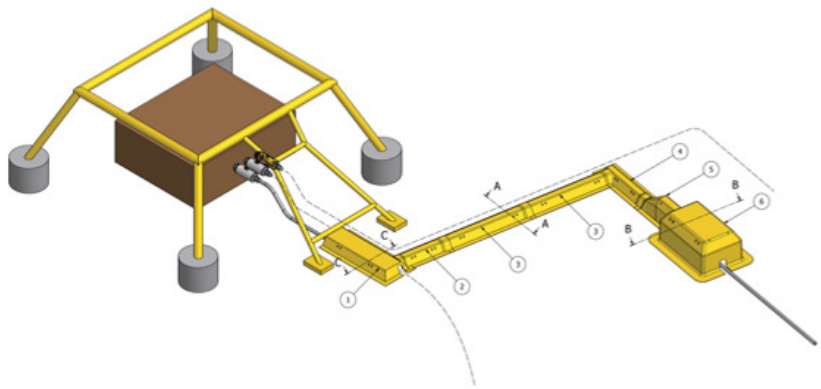

Figure 2-2 Schematic of a typical subsea template solution for CO_2 injection. Source: Gassco

Between these battery limits, the CO_2 will be transported either by a pipeline system or by a ship solution to the location for geological storage. The pipeline alternative includes compression of CO_2 to a inlet pressure necessary for obtaining the required flow rate and minimum outlet pressure at the subsea template, as well as onshore and offshore pipeline sections between the source of the CO_2 and the storage location. The ship alternative includes compression of CO_2, liquefaction and intermediate storage at 8 bara and -55°C while awaiting loading to combined CO_2/LPG carriers for ship transport to the storage location. At this location, the CO_2 is conditioned[1] to necessary temperature and pressure and offloaded to the subsea template.

These scenarios are evaluated for three alternative volume cases; 1, 3 and 5 Mt/yr, corresponding to a design flow rate for 125, 375 and 625 t/hr, respectively, given 8000 hr annual operation. Normally, also variations in flow rate from CO_2 sources as a consequence of alternative operating modes, should be evaluated. However, for the purpose of the CO_2 Europipe project the three alternative flow rates selected should be sufficient for illustrating technical solutions and cost estimates.

The CO_2 stream entering the transport alternatives shall be non-corrosive. After compression (pipeline alternative) and following liquefaction (ship alternative) the CO_2

[1] Conditioning costs are omitted in this study.

shall remain in dense or liquid state when entering the subsea template at the storage location.

2.3 Pipeline transport

In this section, the basis for the pipeline alternative is described. The results are based on conceptual work for alternative pipeline dimensions conducted during 2008 (cost estimated within ±30% accuracy), as part of a project performing pre-engineering on a 12" pipeline from Kårstø that was undertaken in 2009 (cost estimated within approximately ±25% accuracy).

Additional flow simulations have been performed for the purpose of identifying optimal pipeline configuration for the CO2EuroPipe project. Based on this, technical solutions and cost estimates developed during 2008 and 2009 (adjusted to 2010 market conditions) have been used as basis for the below described results.

Technical aspects related to pipeline transport are briefly discussed in this case report, and are presented in more detail in other CO2Europipe reports [*D3.1.1, D3.1.*2].

2.3.1 Pipeline routing

Onshore section
For the pipeline based Kårstø case, it is assumed that the source(s) of CO_2 are located close to the landfall area, implying the need for only a short section of onshore pipeline. The routing for the onshore section will then be a straight line from the battery limit location between the capture and transport system, down to the landfall area, see the below figure.

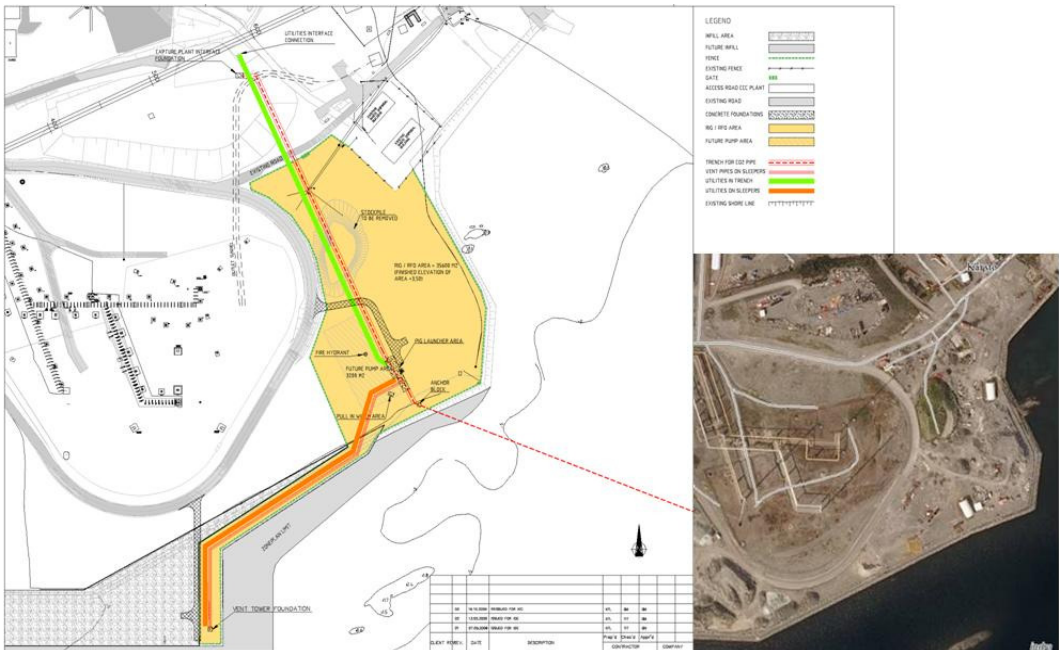

Figure 2-3 Schematic layout - onshore section and landfall area. Source: Gassco

As part of earlier studies related to both CO_2 pipelines and gas pipelines, several landfall areas in the Kårstø region have been evaluated, and in the CO2EuroPipe Kårstø case the area illustrated in the figure has been chosen as representative.

The dotted red line onshore represents the onshore pipeline route down to the landfall area. The green line represents a trench for utilities, and the orange line represents a flow line from an area for pigging facilities (see Section 2.3.9) to a selected location for a blow down vent stack (see Section 2.3.12).

The length of the onshore pipeline section is approximately 350 m.

Offshore section

Several pipeline routes with alternative pipeline dimensions have been evaluated for the near shore and offshore sections of the approach towards Kårstø as part of other pipeline projects. Based on these, a route from Kårstø to the storage location has been selected for the CO2EuroPipe Kårstø case, which is considered feasible, cost efficient and flexible with respect to alternative pipeline dimensions (and thus laying methods, see Section 2.3.5). This route is illustrated in the below figures.

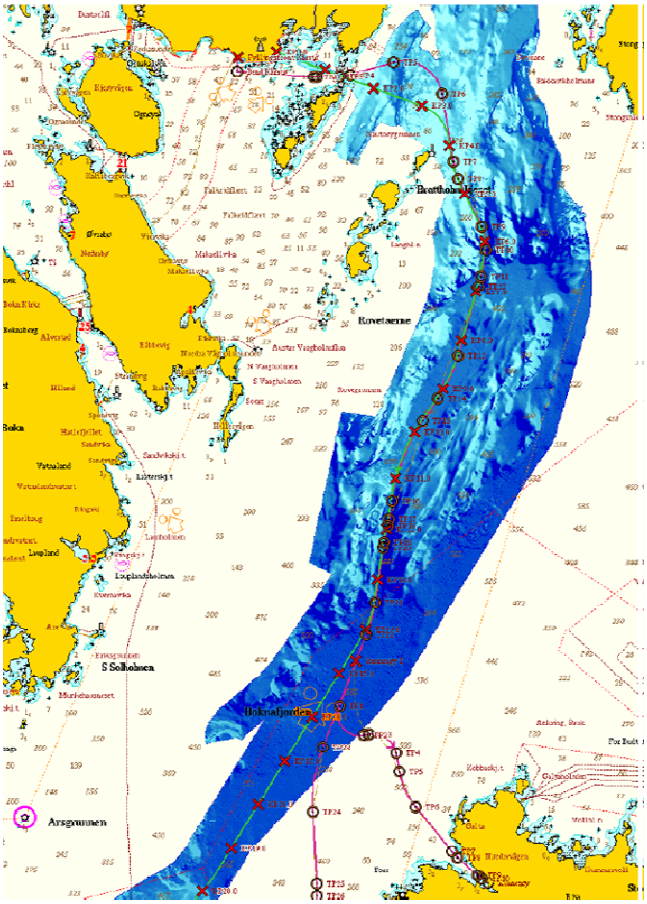

Figure 2-4 Pipeline routing for the first 20 km. The CO_2 pipeline is represented by the green line. Source: Gassco

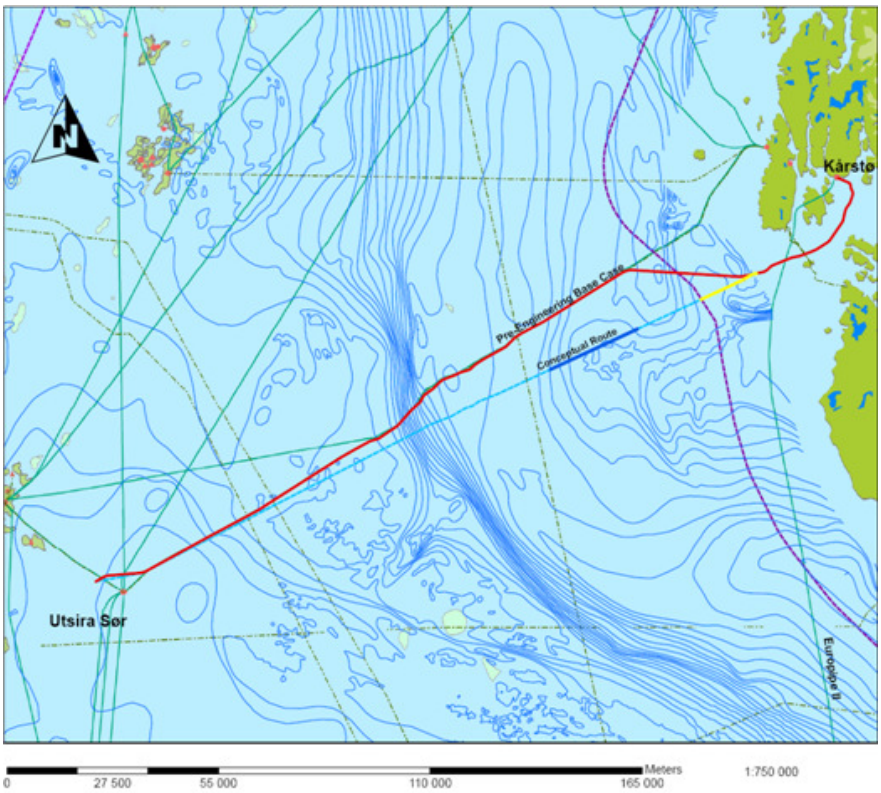

Figure 2-5 Overall pipeline route (red line). Source: Gassco

The reason for the northerly deviation from a straight line (the blue/yellow line) is an identified area for iceberg scours (i.e. areas where icebergs during the last ice age made up to 30m deep and several kilometres long marks on the seabed), which would imply free span areas along the route, and thus increased need for seabed intervention and risk during operations related to fatigue and material stress.

The water depth profile along the selected route is given in the below figure. As seen from the figure, there is a significant change in the depth of the pipeline during the first part of the pipeline route. This represents a particular challenge with respect to modelling of flow conditions, philosophy with respect to burial of the pipeline (temperature effects, see Section 2.3.3) and establishment of procedures related to blow down of the pipeline, see Section 2.3.12.

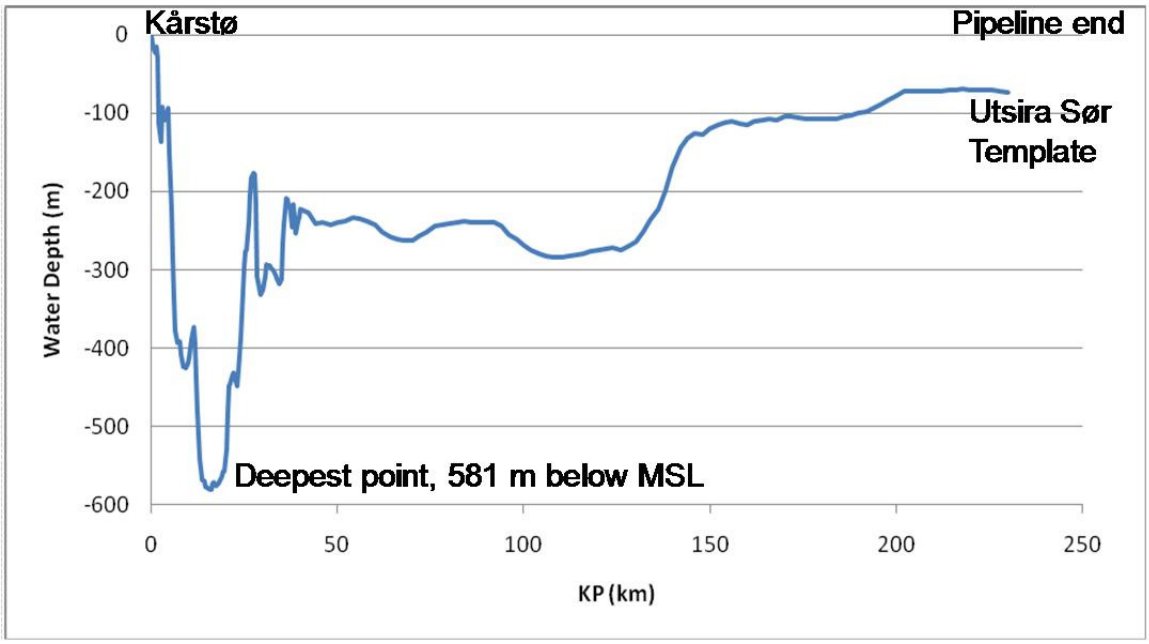

Figure 2-6 Depth profile Kårstø case. Source: Gassco

In general, additional attention should (and have for the pipeline route described above) be addressed to the following when selecting pipeline routing:

- Material and lay vessel costs as a function of pipeline length
- Potential impact from trawling activities (impact from trawl boards to the pipeline walls)
- The need for seabed intervention due to rough and uneven terrain
- If need for burial of pipeline, the possibility of obtaining necessary depth of trenches
- Soil characteristics with respect to stability and thus structural integrity
- Evaluation of bathymetric data with respect to impact from waves, currents and sea movement in general
- Existing infrastructure
- Granted rights in defined areas, e.g. to petroleum activities
- Any relevant regulation

The total length of the pipeline is approximately 240 km.

2.3.2 Hydraulic analyses and pipeline dimensioning

Simulation of the behavior of the CO_2 stream in the pipeline should be performed to evaluate:

- The relationship between pipeline dimension, inlet pressure and transport capacity as a results of relevant pipeline characteristics (e.g. pipeline topography profile and surface roughness of the pipeline material)
- Temperature effects along the pipeline route
- Alternative operating modes, both steady state transport and transitions between alternative operating modes (including the "no flow" mode)
- Leakage situations with respect to flow rates and duration of an accidental event
- Planned blow down of the pipeline (venting of CO_2 to the atmosphere)

Particular issues having an effect on the flow in the pipeline should be evaluated, e.g.:

- The effect of burial of the pipeline for the first kilometres. The CO_2 stream can have a relative high temperature (50ºC or more) exiting the capture plant and compression station. At this temperature, the density of the CO_2 stream is significantly lower than at ambient sea water temperature (typically 4-9ºC in the North Sea). Friction in the pipeline is significantly affected by the density of the CO_2, and since density is dependent of temperature, the degree of heat transfer through the pipe wall (affecting the temperature profile along the pipeline) will have an impact on the transport capacity of the pipeline by affecting friction. Burying the pipeline in the seabed for the first section will result in a lower heat transfer than if the pipeline is laying on the seabed itself, since the soil around the pipeline will act as insulation (for a pipeline not buried, water constantly passing the pipeline wall will "remove" heat more quickly), and thus the burial philosophy for the pipeline may affect requirements related to pipeline dimensioning.
- The effect of using flow coating on the internal pipeline wall. A liner on the internal pipe wall may reduce the effect of corrosion during installation, may simplify RFO and will increase transport capacity by reducing friction between the CO_2 medium and the pipe wall. If used, the liner material needs to be resistant to erosion from the CO_2 flow, as well as to being dissolved by the CO_2. Although being frequently used in hydrocarbon pipelines, internal liner is generally not recommended due to the risk of detachment from the base pipe material in a potential low temperature condition associated with a too rapid pipeline depressurisation [*DNV I*].

Based on the assumptions given in the design basis in Section A1 and for the selected pipeline route/profile, hydraulic analyses have been performed for the alternative volume scenarios, see the below table.

Table 2-1 Key results from the hydraulic simulations

Flow Rate Mt/yr	OD inch	ID mm	Inlet P Barg	WHD Barg	Choke mm	Choke P drop Barg	Outlet P Barg
1	8	193,7	182,5	53,3	30,5	35,9	95
3	12	288,9	199	53,1	N.A.	N.A.	107,5
5	16	371,4	196	84,7	N.A.	N.A.	95

The results show that a 8", 12" and 16" pipeline will have sufficient transport capacity for the alternative volume scenarios, respectively.

As described in Appendix Section A1.2.3, there is a functional requirement for the CO_2 stream to be at a pressure not lower than 53 barg in the entire pipeline. Depending on the topography of the pipeline (high sections may have a lower pressure due to the hydrostatic effects) the lowest pressure in the pipeline is at the outlet, i.e. at the template location. The possibility of obtaining such exit pressure from the pipeline depends on the configuration of the well (diameter and depth) and the injectivity of the geological formation. If the injectivity is high - the formation has a good ability to absorb the CO_2 - the pressure at the top of the well may become lower than desired, since there is not sufficient "resistance" in the formation.

In such case it may be necessary to install a choke valve at the template to maintain the pressure in the pipeline. Then, there will be a pressure and temperature drop over the valve which should have particular focus with respect to the integrity of the well.

For the case studied in this report, it was found to be necessary to install a choke for the 1 Mt/yr case, which is reflected in the hydraulic analyses, see results in the above table. It should, however, be noted that for lower flow rates in the pipelines designed for 3 and 5 Mt/yr, such a choke is probably also needed.

2.3.3 Pipeline mechanical design

Mechanical design of pipelines in general (including CO_2 pipelines) needs to be considered with respect to the following issues.

<u>On-bottom stability design</u> is required to ensure pipelines withstand hydrodynamic lift and drag forces induced by water waves and currents. It also includes confirmation that trenched pipelines have a specific gravity which is both sufficiently high to prevent flotation and sufficiently low to prevent sinking further down into the seabed. The analyses include evaluations related to:

- The need for burial of the pipeline
- Specific gravity of the pipeline, including the need for weight coating (concrete coating)
- Procedures related to the installation phase of the pipeline, e.g. the need for water filling to obtain sufficient specific gravity during this phase
- Need for rock dump to further stabilise pipeline sections

<u>Cathodic protection</u> of the pipelines is required to prevent oxidation of the pipeline-steel. For offshore pipelines, this can be obtained by using sacrificial anodes, see example in the below figure. In order to achieve complete cathodic protection of the CO_2 transport pipeline two requirements must be fulfilled:

- The anode mass must be sufficiently large to satisfy the current requirements over the life of the system. Alternatively, anodes may be replaced during the lifetime of the pipeline (normally anodes will remain for many years before replacement is necessary)
- The anode current output must be equal to or larger than the anode current demand

In principle, pipeline protection is calculated by establishing the current demand of the pipeline and then matching it with a number of anodes which fulfils this demand. In any normal case, the pipeline will also be protected by a coating which helps reduce oxidation.

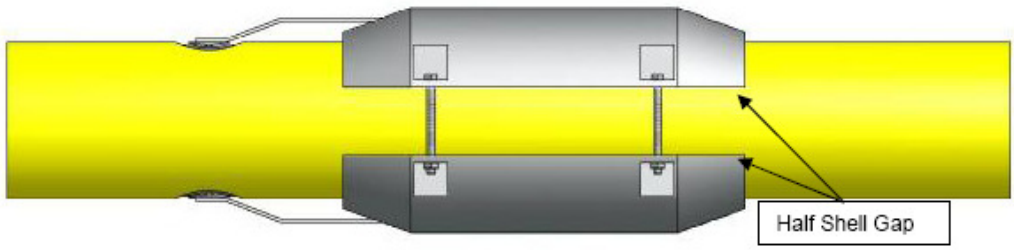

Figure 2-7 Typical bracelet anode attached to pipeline for cathodic protection. Source: Gassco

Buckle and fracture arrestors are used to prevent damages caused by accidental loads to expand progressively over long distances by a propagating buckle or collapse failure caused by the hydrostatic pressure of the seawater. It may be uneconomic to design a pipe with sufficient strength to resist propagating failures. For this reason installation of buckle arrestors, such as heavy wall integral rings installed at intervals along the pipeline, should be considered. A series of buckle arrestors, each sufficiently strong to stop a propagating collapse failure, would limit the extent of loss in the event of a mishap.

For fracture arrestors the pipeline design should account for the special properties of CO_2 with respect to the susceptibility to running ductile fractures.

Trawl impact from large industrial trawlers may cause critical damage to subsea pipelines. Trawler equipment has increased in size and weight over the last years and their designs are considered a serious risk to the pipeline integrity.

The most cost effective pipeline protection method from trawl impact is by trenching, usually by jetting, but also by mechanical means. The trenching operation would normally leave the pipe in an open or partly open trench, which over time may be back-filled by collapse of trench sides or by sediment transport. Mechanical backfill may also be considered.

Pipelines with dimensions equal to, or lower than 16” should normally be trenched in trawling areas.

Pipeline expansion is caused by temperature variations in the CO_2 flow as well as in the surroundings of the pipeline. Effects of movement of the pipeline and the need for stabilising measures (e.g. gravel dumping) should be evaluated.

The following assumptions are used for the cost estimates related to pipeline mechanical design.

- The pipeline is assumed to be trenched, but not back-filled, for the pipeline section starting 40 km (kilometre Post 40, KP40) from Kårstø, and for the remainder of the pipeline route. The reason for this is heavy trawling in the area. Also a small area between KP0 and KP40 is assumed to be trenched, but not back-filled, due to shrimp trawling. The reason for not filling the trenched mass back is the assumption that the trench will be naturally filled after some time, and that this is acceptable for the integrity of the pipeline.
- The calculation of need for cathodic protection is made according to the standard of ISO/FDIS 15589-2. For buried pipelines the maximum allowable distance between the anode-clusters is 300m. The anode material is of the Al-Zn-In type. Analyses shows that for the three alternative pipeline alternatives, the necessary anode mass is approximately 14 000, 18 000 and 22 000 kg, respectively.
- For the reeling installation method (see Section 2.3.5), no buckle/fracture arrestors are assumed necessary, since the necessary pipeline strength related to withstanding reverse plastic bending during installation will exceed the necessary strength related to withstanding buckling and propagating fractures. For the S-lay method, less than 3% of the pipe length is assumed to need additional buckle arrestors.

2.3.4 Tie-in design

Tie-in design describes the technical solution for approaching and connecting the offshore pipeline to the subsea template at the storage location, see the figure in Section 2.2 for an illustration of one such solution.

Various tie-in designs exist, and are normally part of larger system deliveries (e.g. templates). The systems have varying restrictions related to what they may be used for, e.g. related to pipeline dimension.

For the cost estimates a so-called z-spool with one mechanical connector at either end will be used, designed to take possible misalignment loads within the deflection capability of the z-spool, see the below figure.

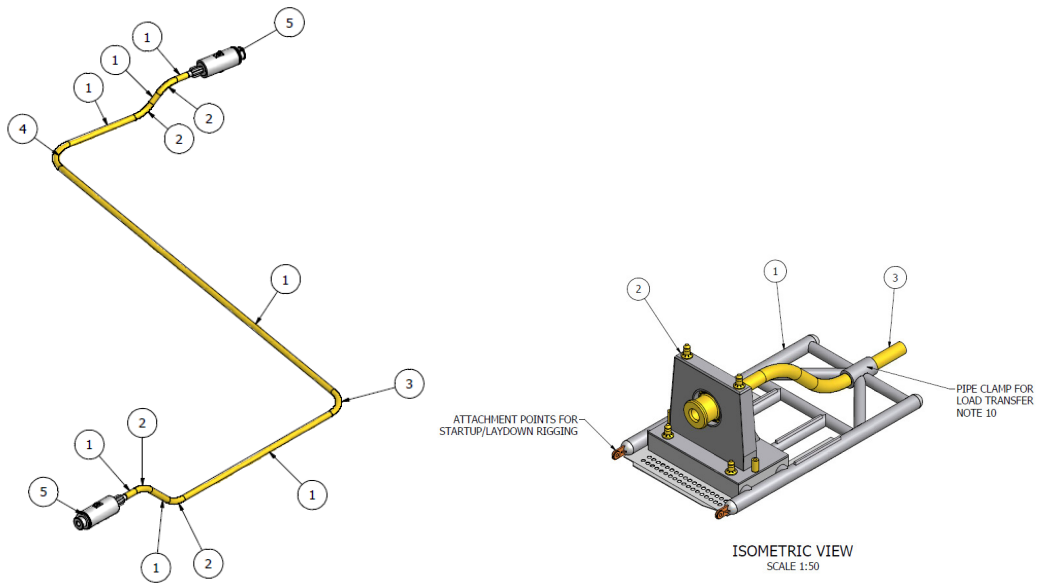

Figure 2-8 Tie-in spool arrangement – Z-Spool (left) and typical Pipeline End Termination (right). Source: Gassco

The tie-in spool is connected in one end to the pipeline with a PLET (Pipeline End Termination) structure and directly to the subsea template in the other end.

2.3.5 Template functional requirements

To ensure safe and efficient operation of the transport system, functional requirements need to be specified for the downstream template. This is both related to integrity issues (safe operations), but also to functions that the pipeline system depends on, and that are located at the template.

Typical requirements in this context are;

- Requirements related to the physical design, e.g. related to dimensioning etc to ensure that the connected pipeline fits into the template when it is being installed on the seabed.
- Design life requirements
- Operational data, e.g. related to maximum/minimum pressure, temperature, flow rate, density of the CO_2 stream etc.
- Material selection
- Installation procedures (mat affect design)
- Loads on the template from the pipeline (e.g. from movement of the pipeline on the seabed due to sea currents).
- Possibility to use template as part of the commissioning of the pipeline (e.g. use of valves during pressure testing of the pipeline, possibility to connect permanent or temporary pigging receivers during pigging as part of the dewatering procedure)

- Instrumentation (e.g. related to flow monitoring in the pipeline; monitoring of flow, temperature and pressure)
- Requirements to response time for closing or opening of valves and choke during normal operations
- Possibility to inject chemicals into the pipeline, e.g. related to hydrate formation close to the template.

2.3.6 Pipeline installation

Alternative pipeline installation methods are available, depending on pipeline dimension, water depth and topography along the pipeline route. The most relevant methods for the Kårstø case are the S-lay method and the reeling installation method.

Installation of the offshore section of a pipeline with an S-lay vessel (see example in the below figure) is achieved via a long ramp extension or stinger at the stern. As the pipeline moves across the stern of the lay barge and before it reaches the ocean floor, the pipe is supported by the stinger. When the pipe is welded the pipeline is fed into the sea by moving the vessel forward on its anchors or using a DP (Dynamic Positioning) system. Rollers placed on the stinger and within the vessel, together with tension machines, create a curved support for the pipeline on its way into the sea.

Figure 2-9 Semi-submersible S-lay vessel – The Piper (Acergy)

S-lay vessels can normally be used for pipeline dimensions up to approximately 60”.

Reeling vessels (see example in the below figure) may normally be used for pipeline dimension up to 16”. Reeling is a technique where the pipe is assembled into long lengths onshore and wound onto a reel on the vessel by yielding the steel. At the field it is then unwound, straightened and J-laid down to the seabed. The DP vessel is able to lay rapidly because there are no welds to complete.

Figure 2-10 Reel vessel – Seven Navica (Subsea 7)

The cost estimates for the alternative volume cases are based on S-lay installation. Normally, for pipeline sizes allowing reeling installation, such installation method will imply reduced installation costs. However, an analysis shows that for pipeline sizes from 10" and above, reeling would imply significantly increased pipeline wall thickness, and thus increased pipeline material costs. For the Kårstø case, this analysis shows that reeling installation in total is less expensive than S-lay for the 8" alternative, and most probably also for the 12". For the 16" alternative S-lay is considered to be the likely preferred solution. However, substantiated cost estimates on a +/- 30% confidence level are for the 8" and 12" only developed for the S-lay alternative, and the uncertainty related to installation method cost differences is considered to be less than the reduced confidence level for an updated cost estimate for reeling, and thus S-lay is kept as the basis for the estimates.

2.3.7 Seabed intervention

Seabed intervention is performed to avoid unacceptable free spans for the pipeline, to support the pipeline where required, to enable acceptable bends, curves and other pipeline configuration causing stress to the pipeline material during installation and operation. In addition, crossings of other infrastructure, e.g. pipelines and cables, may require seabed intervention.

Seabed intervention methods are typically gravel dumping (gravel size suitable for the relevant purposes), underwater blasting and trenching (with or without backfill). In addition, concrete mattresses can be used as separation between the pipeline and other infrastructure for crossing purposes, and other, tailor-made solutions may be evaluated for specific needs (tunnels, culverts etc).

For the pipeline route from Kårstø to the storage location, in total of 17 pipelines and cables are to be crossed. At each crossing, a rock berm would first have to be installed across the line/cable to be crossed, to ensure the required separation. This pre-lay berm would have a nominal height which is the line/cable OD plus 0.3 m (required

separation) plus a vertical tolerance of 0.2 m., see the below figure, and a length depending on the crossing angle, but 15 m as a minimum. The width of the berm would have to be the pipelay corridor width (5 m), plus an additional 4 m for installation tolerances, in total approx. 9 m. In accordance with minimum requirements, the crossed pipeline shall be at least 3 m distant from all corners of the pre-lay infill.

After laying of the pipeline, the spans on either side of the crossing would be infilled to a minimum height 1.0 m above top of pipe.

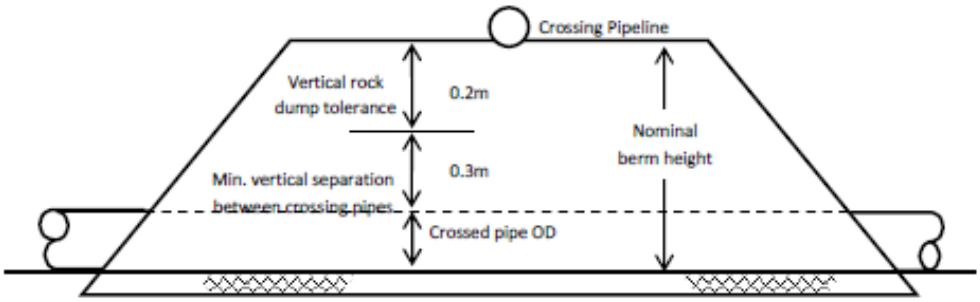

Figure 2-11 Pre-lay berm arrangement at crossings. Source: Gassco

Rock dumping would also be required at some locations for free span control, and it is evaluated that approximately 3400 m^3 rock masses is required for this purpose, varying insignificantly between the alternative volume scenarios.

2.3.8 Landfall design

Landfall design relates to planning for pull-in of the pipeline from the lay vessel normally using winches, as well as preparation of the pull-in route to ensure a smooth profile up to, and including the splashing zone. A typically pull-in configuration is shown in the below figure.

Figure 2-12 Typical layout for pull-in operations including winch foundations and anchor block. Source: Gassco

An earlier installation analysis performed for a similar pipeline project at Kårstø has been used to evaluate issues that includes;

- anchor pattern for the installation vessel
- stern ramp configuration for the pipeline leaving the vessel
- pipeline tension during installation, in particular for curved lay and free spans
- geotechnical condition of the sea bed in the splashing zone
- methods for position control of the vessel where anchoring is restricted
- risk during installation, e.g. related to possibility of interference with seabed unevenness, start-up activities and marine operations

The results from this analysis show that installation with relevant installation vessels are feasible for the preferred landfall solution.

2.3.9 Onshore piping design

Onshore piping consists of approximately 350 m pipeline from the landfall to the upstream battery limit towards the capture plant. In addition to the pipeline itself, the following functions are part of the section:

- Compressor station, compressing the CO_2 from battery limit condition to required export pressure for the alternative volume cases

- Metering station, having the purpose of on-line monitoring of the level of impurities in the exported CO_2 stream, as well as fiscal metering of the volume exported
- Pig launching facilities for launching of tools for internal inspection of the offshore pipeline section (pigging tool)
- Blow down vent facilities for pressure release of the pipeline and venting of CO_2 to the atmosphere, see Section 2.3.12
- ESDV valve for emergency shutdown of the offshore section of the pipeline
- Valve arrangements and automatic system for shutdown of the offshore section of the pipeline in situations where the exported CO_2 is off-spec, to prevent any off-spec CO_2 entering the offshore section of the pipeline system
- Utilities for serving the above functions (drains, power, steam, instrument air, potable water etc)

The automatic system for shutdown of the offshore section of the pipeline will prevent off-spec CO_2 entering this offshore pipeline section, but will not prevent off-spec CO_2 (e.g. with too much water) entering the onshore section downstream of the compressors and metering station. Thus, the material in the onshore section upstream of the isolation valve between the onshore and offshore section needs to be able to withstand relevant corrosion challenges. Duplex stainless steel may be selected for this purpose.

For the cost estimates duplex stainless steel designed for -46°C/+50°C has been selected. The main parts of the onshore pipeline will be buried to avoid interference with existing and future installations. The underground part of the onshore pipeline will be externally coated for corrosion protection.

To prepare for internal inspection of the onshore pipeline section, flanges will be installed in both ends for this purpose.

2.3.10 Compression

Three compression scenarios were designed based on three different flow rates of 1, 3, and 5 Mt/yr. The inlet conditions for all cases are 1 bara and 20°C, as described in Section A1. The inlet stream consist of CO_2 saturated with water. In all cases the outlet conditions are set at 50°C and a water content of 50ppm(wt).

The table inSection 2.3.2 gives the design premises for the design of the compressor system.

1 Mt/yr:
The specified duty can be accomplished within one single train gear type compressor type STC-GV(50-8) with eight impeller stages, see the below figure. The typical (polytropic) efficiency of 85.6% which results in a total power requirement of 12.3 MW.

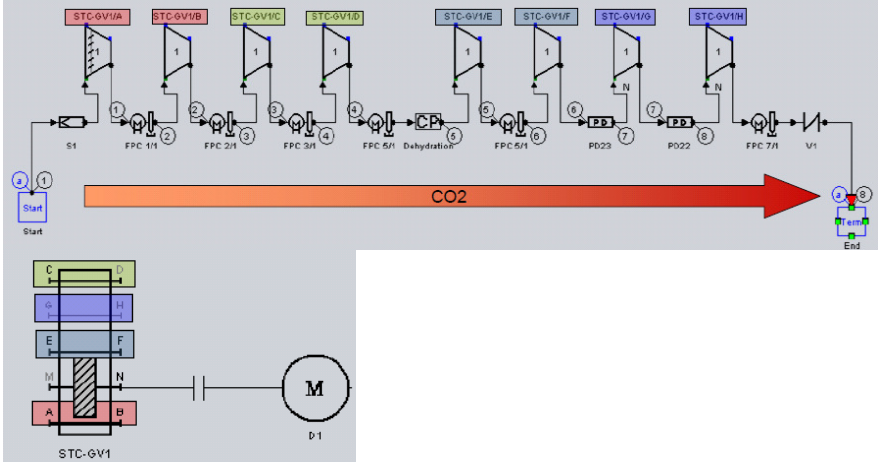

Figure 2-13 Design setup of compressor system for the 1 Mt/yr case. Source: Siemens

3 Mt/yr:

For both the 3 and 5 Mt/yr case a double train of 2 x 50% is chosen. For the 3 Mt/yr case, an eight stage integrally geared compressor of type STC-GV(80-8) is recommended, see the below figure. With full flow rate, the total power requirement is 2 * 20.6 MW.

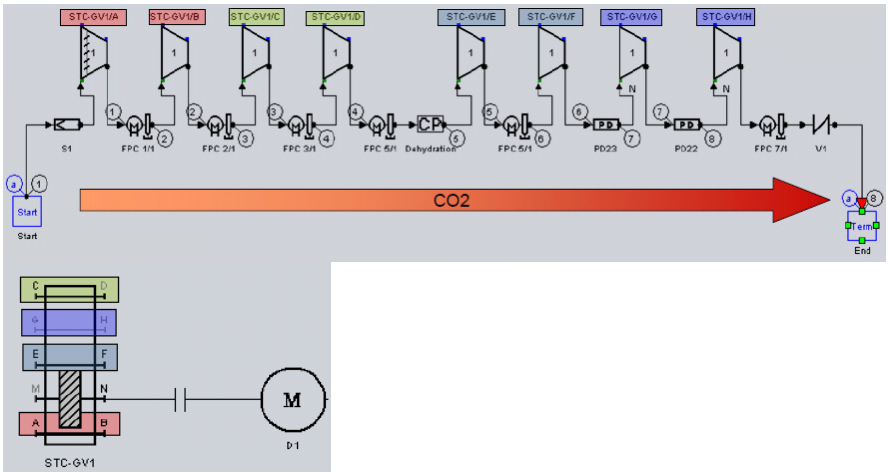

Figure 2-14 Design setup of compressor system for the 3 Mt/yr case. Source: Siemens

5 Mt/yr:

As for the 3 Mt/yr case, a 2 x 50% train solution is recommended. The proposed system is the STC-GV(100-8), see the below figure. The power requirement of the compressor trains for both the 3 and 5 Mt/yr case are within the current experiences with these types on compressor systems. For the 5 Mtonnes/year case, with full flow rate, the total power requirement is 2 * 32.9 MW.

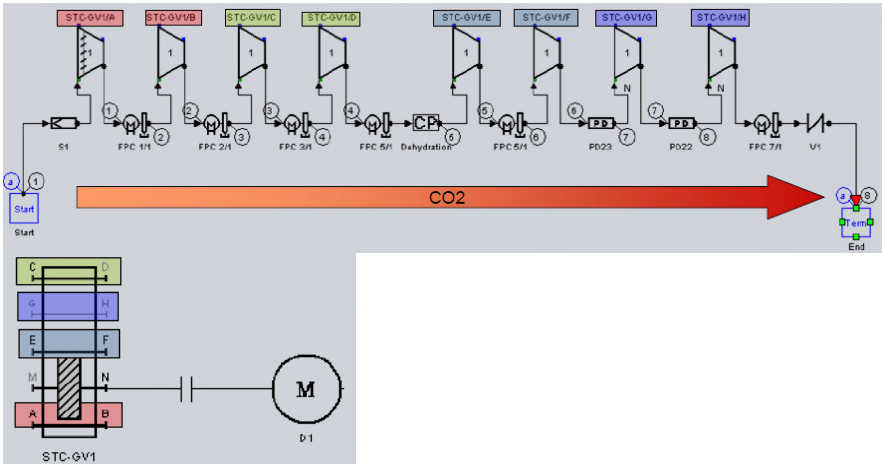

Figure 2-15 Design setup of compressor system for the 5 Mt/yr case. Source: Siemens

Interstage equipment

For all three cases the first six stages are intercooled coming close to the ideal case of an isothermal compression with best efficiencies. The last two stages however remain uncooled due to the physical nature of the transported CO_2.

Within the compression path, a dehydration unit and aftercooler are added to meet the pipeline requirements in terms of humidity and temperature.

Miscellaneous

The compressor trains are offered within a steel package design incorporating all piping and coolers. Where feasible also the motor driver can be part of the package. This will reduce the installation time on site and will allow for testing in package arrangement.

For machine monitoring and protection Siemens has incorporated its "SCAUT" Control system, allowing automatic start-up and shutdown sequencing as well a anti-surge and performance control.

As driver Siemens has considered a motor drive with a soft starter system to minimize torque loads of the mechanical parts. All in all Siemens offered a concept with minimized interfaces and lowest installation time on site.

2.3.11 RFO

RFO, also known as pre-commissioning, means all flooding, pigging, cleaning, gauging, pressure testing, dewatering and conditioning activities prior to commissioning.

Upon completion of the pipe lay operations but prior to trenching operations, the pipeline will be flooded using a pig train that includes a gauge pig. The pig train will be propelled by a HVLP (High Volume Low Pressure) pump located at Kårstø.

The pipeline will be trenched after the flooding and gauging operations are completed.

Upon completion of the trenching operations the pipeline will be pressure tested in accordance with [*DNV II*], using a LVHP (Low Volume High Pressure) pump. Following completion of testing the pipeline will be depressurised to ambient seabed pressure and tied into the template manifold.

Once the system leak test is completed the system will be dewatered from Kårstø, using air as a propellant with an air compressor spread based at Kårstø.

2.3.12 Blow down philosophy and design

Once in operation, no complete depressurisation of the pipeline is planned during the life time of the system (50 years). However, risk related to material damages or external threat, may cause a need for depressurising of the pipeline to reduce potential consequences of a leakage or to reduce the probability of material failure. For being able to perform such depressurisation, a system for evacuating the CO_2 in the pipeline to the atmosphere needs to be implemented. For the Kårstø case, this is obtained by installing a vent stack close to the sea, at the point in the area furthest away from manned areas.

Such a vent stack needs to be designed and operated taking the following points into consideration:

- The flow through the vent system needs to be sufficient to cater for potential requirements to quick blow evacuation of the pipeline system. Depressurisation of long pipelines (200+ km) will, however, normally take a long time (typically more than 10 days), due to limitations related to material temperature – see the discussion below.
- Increased concentrations of CO_2 in the atmosphere may represent hazard for personnel, see the below table. Dispersion of the CO_2 cloud from the vent needs to be evaluated for various atmospheric conditions.
- The CO_2 stream through the nozzle of the vent stack, and the immediate phase transition of CO_2 from dense or liquid phase to gaseous phase at the nozzle opening will result in supersonic noise during most of the period for depressurising the pipeline. Since CO_2 cannot exist in dense or liquid phase in ambient pressure, a shock zone will be formed immediately outside the nozzle, having a length of several meters in the direction of the CO_2 stream through the nozzle. This shock zone will result in extreme noise levels (typically up to 150 dBA or more). Such noise levels will cause permanent hearing damage even on distances several hundred meters from the vent stack. Thus, measures need to be implemented to reduce the noise impact.
- Depressurisation of the entire pipeline to low pressure will result in phase transition of the CO_2 in the pipeline from dense or liquid phase to gaseous phase. In the “bubble zones”, energy required for the phase transitions will be extracted from the surroundings of the CO_2, implying a significant temperature drop.

Allowing the phase transition process to be performed too quickly, the temperature in the pipeline material may become lower than the design code. Thus, the rate of depressurisation of the pipeline needs to controlled so that the temperature in the pipeline material throughout the length of the pipeline is maintained within the required region. This is a particular challenge for the Kårstø case, since the topography (see the figure in Section 2.3.1) allows for formation of several natural "water locks".

Table 2-2 Praxair Material Data Sheet, CO_2 (MSDS No. P-4574-H), May 1999

EFFECT:	CONCENTRATION:
Breathing rate increases slightly.	1%
Breathing rate increases to 50% above normal level. Prolonged exposure can cause headache, tiredness.	2%
Breathing increases to twice normal rate and becomes labored. Weak narcotic effect. Impaired hearing, headache, increased blood pressure and pulse rate.	3%
Breathing increases to approximately four times normal rate, symptoms of intoxication become evident, and slight choking may be felt.	4 - 5%
Characteristic sharp odor noticeable. Very labored breathing, headache, visual impairment, and ringing in the ears. Judgment may be impaired, followed within minutes by loss of consciousness.	5 - 10%
Unconsciousness occurs more rapidly above 10% level. Prolonged exposure to high concentrations may eventually result in death from asphyxiation.	50 - 100%

For the cost estimates it is assumed that dispersion of CO_2 will not represent unacceptable hazard to life and health. Simulations performed show that the CO_2 will be ejected from the vent stack at such a velocity that the CO_2 concentration at ground level (up to 2 m above ground) is at no time above 0.5% under any wind conditions. A safety zone will in any case be implemented around the vent stack to further reduce any possibility of hazardous CO_2 concentration in areas with personnel present.

To prevent damages from the noise generated during depressurisation, a chimney shaped concrete structure around the vent stack is assumed to reduce the noise level to an acceptable level for depressurising operations. The cost of such a structure is included in the cost estimates.

2.3.13 Technical and operational requirements

Technical and operational requirements for the pipeline system are given in [*DNV I*]. Due to the special characteristics of the CO_2, compared to hydrocarbon transport, particular focus should be given to:

- Requirements related to variations in flow rates and procedures for transitions between flow conditions
- Handling of abnormal flow conditions, including procedures for handling of contingency situations
- Coordination of operational procedures between capture, transport and storage systems
- Possibilities for inspection and online condition monitoring, both for onshore and offshore sections of the pipeline system
- Design and operations to avoid two-phase flow in the pipeline system
- Possibility of installation and operation according the HSE requirements discussed below.

For the cost estimates it is assumed that the day-to-day system operations of the pipeline is performed from a control room already existing at Kårstø.

2.3.14 HSE, regulations and authority requirements

A system for pipeline transport of CO_2 as described in the Kårstø case is a major development project implying the need for identifying and handling of risk both during installation and operation. Necessary requirements and procedures need to be established to ensure that activities are performed in a safe manner and according to defined objectives.

Health, Safety and Environment
Activities to ensure safe operations normally include:

- Establishment of necessary procedures related to monitoring activities, audits, handling of deviations and nonconformities, security requirements, risk acceptance criteria and environmental and social requirements
- Establishment of HSE programs for the different phases in a project, describing requirements and HSE related activities within each phase
- Establishment of a system for risk identification and handling of risk elements
- Performing risk analyses within each phase, both related to operations and construction
- Performing particular risk analyses for 3rd party risk
- Performing risk analyses for environmental risk and describing environmental impact in an EIA, including the effect of emissions

Regularity
Regularity requirements need to be established and regularity analyses performed to evaluate the impact of system irregularities. Particular attention needs to be put on the system for preventing off-spec CO_2 entering the offshore section of the pipeline system. The analysis should be based on the relevant system configuration and on experience data for similar systems/equipment, where available.

Since no experience is available for long (200+ km) subsea high pressure standard carbon steel CO_2 pipelines, effort needs to be focused into obtaining relevant experience data through testing, where such data currently is not available. For equipment or system configuration where reliable relevant data is difficult to obtain, a conservative approach, using engineering judgment should be used.

For the cost estimates it is assumed that the CO_2 stream in the pipeline system is non-corrosive, and that costs (i.e. steel requirements) are impacted by pressure and requirements related to laying methods.

2.4 Ship transport

The ship transportation alternative is described in this paragraph. Also for ship transport, some relevant technical aspects related to ship transport are discussed in the current report, and further presented and discussed in WP3.1 [*D3.1.1*].

Seagoing transportation of CO_2 is not a novelty although it has not been used for CCS purposes at this point in time. Current world fleet accounts only for 4 small scale CO_2 carriers that ship food grade CO_2, one of these vessels is depicted below, the M/V Coral Carbonic, see the below figure. Some specific existing LPG carrier can be retrofitted to allow for transportation of CO_2.

Figure 2-16 M/V Coral Carbonic, dedicated CO_2 carrier – 1250cbm capacity. Source: Anthony Veder

As an alternative to the pipeline transportation, ships can be deployed to transport CO_2. Anthony Veder's concept envisages either port to port operation, to increase pipeline volumes, or on a stand alone basis where the vessel discharges (and conditions the CO_2 to injection conditions) offshore. Both concepts are studied in this work package.

For this document four possible shipping cases will be considered:

i. 1 Mt/yr of liquefied CO_2 from Kårstø is transported by ship to the Utsira field and is discharged offshore by the ship and injected into the field.
ii. 3 Mt/yr of liquefied CO_2 from Kårstø is transported by ship to the Utsira field and is discharged offshore by the ship and injected into the field.
iii. 5 Mt/yr of liquefied CO_2 from Kårstø is transported by ship to the Utsira field and is discharged offshore by the ship and injected into the field.
iv. 0.6 Mt/yr of liquefied CO_2 from Mongstad is transported by ship to Kårstø to supplement the existing pipeline flow from Kårstø to the Utsira field.

The purpose of these scenarios being to increase stored volumes, offer CO_2 supply diversification, allow for optimising pipe volumes and geometries and, in the light of this research, compare a pipeline to a shipping solution.

2.4.1 Scope / battery limit

The alternative transportation dictates the following scope definition, see the below figure.

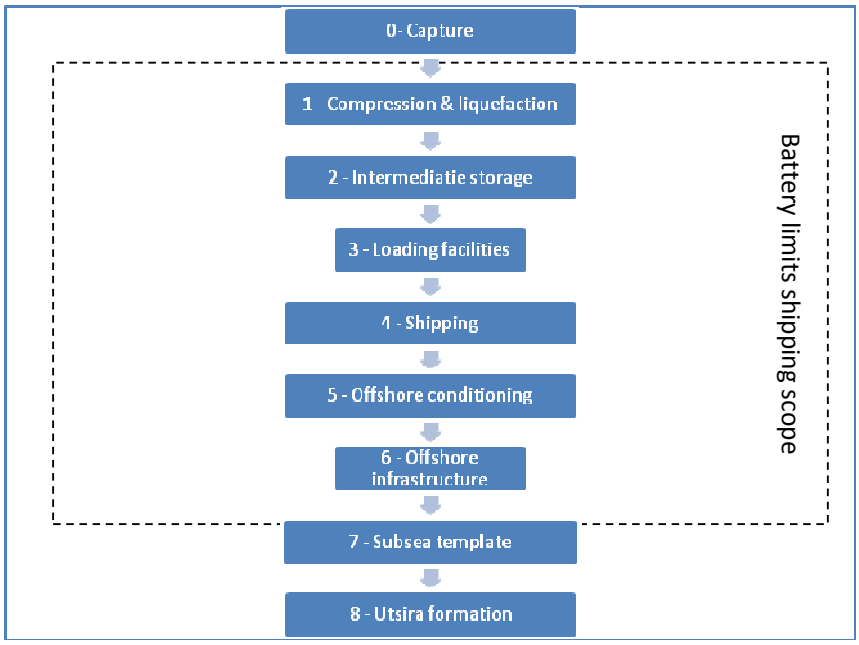

Figure 2-17 Scope definition needed for ship transportation. Source: Anthony Veder

The shipping scope consists of 6 steps that will be described in later sections, but are summarised below. The battery limit for the shipping scope starts at the exit flange of the capture plant and ends at the subsea template. The following steps are defined as part of the shipping scope:

1. CO_2 has a significant volumetric transportation efficiency when transported in liquid phase. The weight / volume ratio of the liquid CO_2 is more suited to transportation in a ship, then in gaseous phase. The captured CO_2 will be liquefied, which means that a liquefaction plant is required at the capture site.
2. Technologies for liquefaction of CO_2 vary, but it is (process) industry practice to perform a dehydration step of the captured CO_2 – H_2O content. The reason for the dehydration is to avoid carbonic acid formation, which is highly undesirable in a metallurgic environment. The liquefaction process itself will then knock out most of the impurities. Since the CO_2 is relative dry and pure, existing thermodynamic knowledge of CO_2 can be used in models. The conditions of the CO_2 after liquefaction are assumed to be -55 °C and 7 barg. As in the pipeline case it is assumed that the CO_2 stream in the shipping transportation chain is non-corrosive.
3. After liquefaction, intermediate storage is required at the capture site due to the batch wise nature of seagoing transportation therefore allowing for time efficient loading of the CO_2 carrier.

4. Preferably near the capture and intermediate storage location a jetty is placed with the loading facilities: at least 2 loading arms are required (1 for cargo flow, 1 for the vapour return).
5. Vessel transportation of CO_2 in cargo containment system onboard a (seagoing) vessel from port to port or from port to offshore discharge location.
6. Conditioning of the CO_2 onboard prior to injection to allow for injection into the well within the working limits as set by the well owner or operator.
7. Offshore infrastructure that allows the vessel to connect to the subsea template / completion that is in turn connected to the well head.

2.4.2 Logistics

The cases described in the introduction of 2.4 have been studied, focussed on the logistics and resulted in the following vessel requirements, roundtrip durations, and intermediate storage needs. It is assumed that the 3,000 cbm and 6,000 cbm vessel will have a discharge rate of 800 t/hr and 350t/hr respectively whilst the larger 30,000 cbm vessel 1,200 t/hr. Loading rates for the smaller vessels are similar (800t/hr in both cases) though in reality will be higher if loading facilities are able to provide high discharge rates, for the 30,000 cbm vessel 1800t/hr loading rate is assumed. Sailing speed is set at 14kts for the smaller vessels and 15kts for the 30,000 cbm vessels, notwithstanding a higher design speed for the vessel to allow for flexibility in the schedule.

Table 2-3 Shipping cases for Kårstø, required vessel sizes and intermediate storage capacity

	Annual volumes [Mt/yr]	Route & distance [nm]	Vessel type	Required vessel size [cbm]	Number of vessels [-]	Round trip duration [d]	Needed roundtrip [-]	Required int. storage capacity [cbm]
Case 1	1.0	130	Offshore discharge	6,000	1	2.4	148	9,000
Case 2	3.0	130	Offshore discharge	30,000	1	3.7	89	45,000
Case 3	5.0	130	Offshore discharge	30,000	2	3.7/2[2]	148	45,000
Case 4	0.6	133	Port to port	3,000	1	1.7	177	3,100 (Mongstad) 3,500 (Kårstø)

In case 4 (shipping 0.6 Mt/yr from Mongstad to Kårstø) calculations have been performed by TNO to quantify the option of using the cold stream of liquid CO_2 in Kårstø for cooling purposes in the compression steps prior to leaving the Kårstø by pipeline (described later).

For other cases that require conditioning of CO_2 prior to injection, TNO performed a calculation to determine the required heat and compression duties prior to injection from vessel to the subsea completion. Industry practise (shipping) to use ambient heat from the sea for specific heating and cooling requirements onboard a ship is included in the later sections).

[2] The vessels will run in a loop, every +/- 2 days a vessel will arrive at the Kårstø site to load and to discharge at the Utsira location

2.4.3 Liquefaction

Given the different volumetric scenario's adequate liquefaction capabilities have to be built at the Kårstø facilities allowing for a modular approach vis à vis the increasing volumes. Several liquefaction technology providers exist using different coolants and processes, and one example is illustrated in the below figure;

- The CO_2 from the capture plant, assuming to be at 1 bara and 40-50°C, is cooled down to approx 11°C, using sea water heat exchangers. A separator is used to remove condensed water.
- The CO_2 is compressed to approx. 5.5 bara, and further cooled to approx. 11°C again, also this time using sea water heat exchangers. Again, a separator is used to remove condensed water.
- The CO_2 is compressed to approx. 20 bara, and further cooled to approx. 11°C a third time with same type of equipment, followed by water removal i a third separator.
- The CO_2 is led through a molecular sieve to remove the remaining water down to the requirement of 50 ppm(wt).
- The CO_2 is compressed to 60 bara and cooled/condensed. CO_2 in liquid phase is led to a system for nitrogen removal.
- The CO_2 is choked to approx. 20 bara, where some 1/3 of the CO_2 will enter gas phase. This CO_2 is heated and rerouted back to one of the above described compression steps.
- The remaining liquid CO_2 is cooled and choked to approx. 8 bara. Again, some of the CO_2 will enter gas phase and rerouted back for recompression.

In this integrated system, use of heat exchangers and economisers are used to optimise exchange of heat energy through the required heating/cooling requirements.

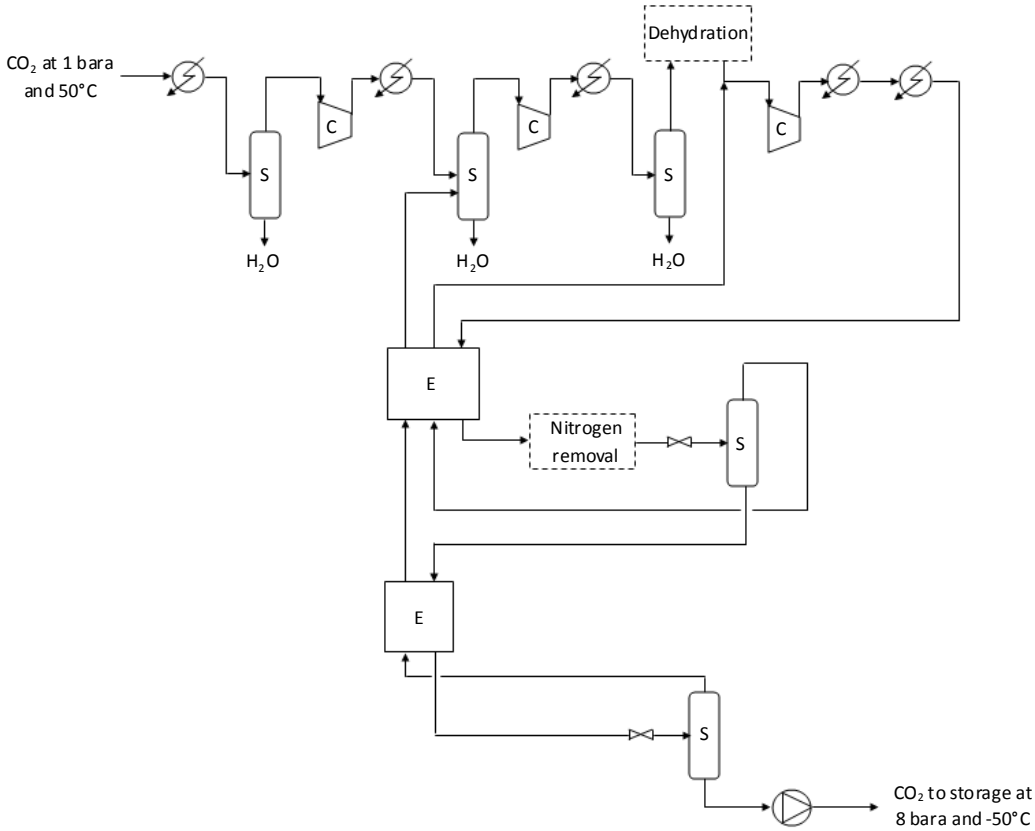

Figure 2-18 Typical system for liquefaction of CO_2 to be stored onshore (for ship transport). Use of compressors (C), separators (S) and economisers (E) indicated in the illustration. Source: Gassco

Power need for this example system is 15.4 MW, corresponding to 111 kWh per tonne CO_2 liquefied. A specific design has not been developed for the Kårstø case, but the cost estimates are based on this unit power requirement.

2.4.4 Intermediate Storage

From previous GASSCO projects the following intermediate storage solutions came forward. The study considered two different modular single-walled storage concepts.

The storage concept is named InnoCell. The InnoCell system allows easy manufacturing and testing, transport and installation of tanks of 535 m3 in cell structures. Two different insulation concepts are studied for this concept. This study compares cost, performance, flexibility in operation, and ease of installation for the two concepts.

Large cylindrical horizontally aligned tanks of 3000 m3, as proposed in previous studies for Gassco, are not considered due to significantly higher costs, high weight, resulting tank wall thickness, and requirements for large foundations and support. Moreover,

large spherical site-built tanks are not investigated in this project due to the high manufacturing cost in Norway.

Each InnoCell will appear as a single tank system, but comprises multiple tanks. A 9-unit cell will have one common 14" feed line, and one 14" delivery line to either injection pipe or ship-loading facility (hub, source). All tanks in a cell will maintain the same pressure. This simplifies monitoring, installation and operation. Any individual tank in the cell can be insulated from the storage cell for maintenance etc.

Other features are pressure safety valves (PSV) on all blocked interconnections, and there will be a venting line through the vent stack on top of the InnoCell to allow for pressure relief. There will be a top-spray system in each tank. There will be either 5 or 6 nozzles on each individual tank, including the vent line, spray-line, top- and bottom filling. The feed lines to the individual tanks in the cell would be 6". The 14" line is connected to the 6" feed and delivery lines via a valve assembly with actuated controls.

The InnoCell CO_2 tanks are either made of P355NL2 or P420NL2 carbon steels. See the below table for tank specifications. P420 is steel with higher yield strength compared to P355. The number denotes yield strength in N/mm2. NL2 is a special low temperature quality normalised rolled carbon steel, the lowest testing temperature for impact toughness is at -50 °C.

Table 2-4 InnoCell CO_2 tank specification

MAIN TANK SPECIFICATIONS		
Gross volume per unit	[m3]	535
Number of units per cell	[#]	9
Gross cell volume	[m3]	4815
Tank length over all incl. skirts	[m]	34.5
Cylindrical length	[m]	28
Diameter	[m]	4.8
Design pressure	[bara]	11
Max. working pressure	[bara]	7.95
Material type 1 P355NL2		
Mat. Thickness 1 *	[mm]	13
Dish end thickness 1	[mm]	17
Weight per unit 1	[tonnes]	57.0
Material type 2 P420NL2		
Mat. Thickness 2 *	[mm]	11
Dish end thickness 2	[mm]	15
Weight per unit 2	[tonnes]	50.0
*2 mm steel for outer corrosion according to EN-standard.		

InnoCell Cold Box System

In an InnoCell cold box, a number of vertical CO_2 tanks will be arranged inside an enclosure, with outer walls supported by a steel structure, insulated with polyurethane plates and outside walls covered with building plates. The CO_2 tanks are single-layer

and primed with polyurethane paint. There is no insulation around the individual tanks within the cell.

To simplify installation, all tank interconnections are bolted. No welding of tank interconnections will be required on site. The piping system is designed for block and bleed. There will be either 5 or 6 nozzles on each individual tank. The CO_2 tanks are equipped with skirts, and can be easily installed into position on the concrete foundation.

In order to avoid icing, a gauge pressure system must be installed. This is to avoid oxygen presence within the cell. If oxygen is present in the atmosphere, icing will occur, and insulation performance will be reduced over time. The gauge pressure will be 0.05-0.1 bar. If the medium is nitrogen, a simple compressor system is required to maintain the pressure.

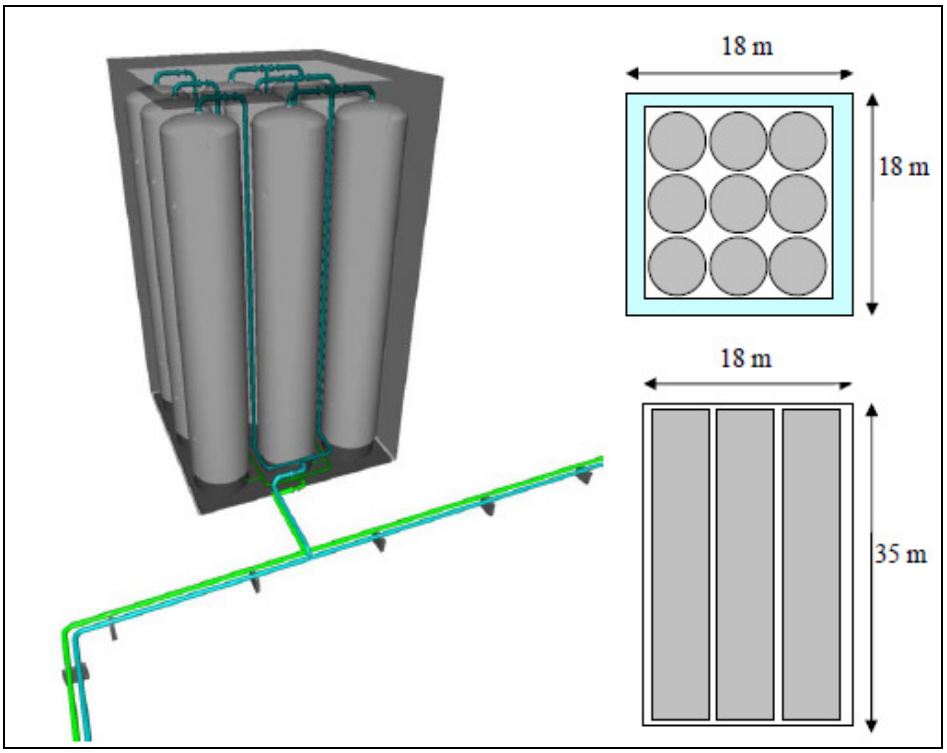

Figure 2-19 Cold-box system, with top- and side-view of 9 x 535 m3 tanks

InnoCell Insulated Tanks

An alternative to the cold-box design is to insulate the CO_2 tanks in manufacturing. This simplifies the installation process, as there would be no need for a cold-box system. The CO_2 tanks are identical to the specification given in the above table, but each tank would require an insulation layer.

The tanks are single-layer and primed with polyurethane paint. The tanks are covered with a thin layer aluminium foil, and a 6 mm aerogel1 blanket with 1 mm aluminium or stainless cladding for protection of the insulation. All interconnections are bolted. No welding of tank interconnections will be done on site. The piping system is designed for block and bleed. There will be either 5 or 6 nozzles on each individual tank. The CO_2 tanks are equipped with skirts, and can easily be installed into its position on a concrete foundation.

Pre-insulated InnoCells could be organised in a hexagonal shaped form to minimise vaporisation from the system. See the below figure for illustration. Each cell could comprise 7 or 9 tanks.

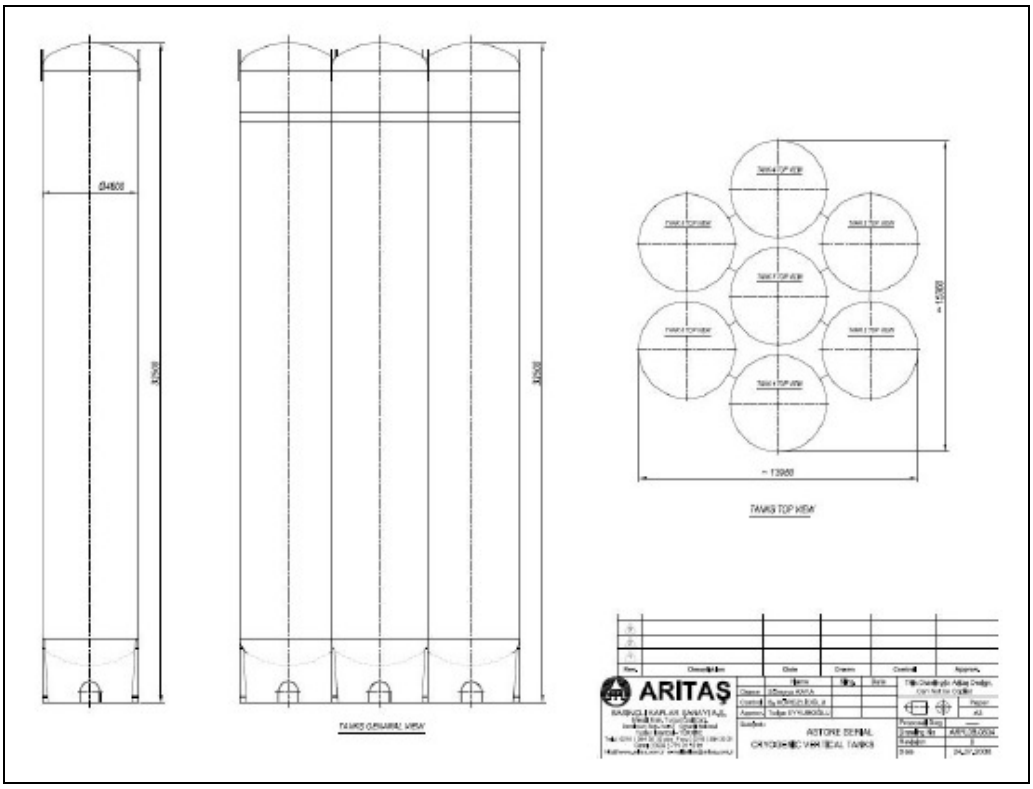

Figure 2-20 Aerogel insulated InnoCell in hexagonal organization

Insulation materials

Polyurethane: The InnoCell cold-box design utilizes insulation mats made of polyurethane. Polyurethanes are widely used rigid foam insulation panels. It is estimated that 60-80 mm insulation panels will provide sufficient insulation for the enclosed cold-box design.

Aerogel: The pre-insulated InnoCell tanks minimises insulation work in manufacturing and tank thickness and allows for easy transport and handling by use of a silica-based Aerogel insulation system consisting of thin insulating matts. Aerogels comprise a

group of nano-materials that are good thermal insulators because they almost nullify three methods of heat transfer (convection, conduction and radiation). They are good convective inhibitors because air cannot circulate throughout the lattice. Silica Aerogel is an especially good conductive insulator because silica is a poor heat conductor.

Aspen's Spaceloft Aerogel (www.aerogel.com) is a silica-based substance, derived from silica-gel. It has remarkable thermal isolative properties, having an extremely low thermal conductivity at around 0.01 W/m*K.

Evaluation of Storage Concepts
A qualitative assessment of the two InnoCell concepts reveals that use of pre-insulated tanks should be preferred with respect to costs, operation and flexibility. The cold box design has its advantage in more easy transport from manufacturing to installation site.

Table 2-5 Qualitative performance comparison of InnoCell storage designs

PARAMETER	COLDBOX DESIGN	INSULATED TANKS
Installed cost	**	***
Operational requirements	** [Gauge pressure/ purging system required]	***
Ease of installation	**	***
Ease of transport	***	**
Flexibility (accessibility of system for maintenance, replacement, or in case of leakage)	**	***
Operational performance	**	***
Zero emission philosophy	***	***
* Low ** Good *** Outstanding		

2.4.5 Recondensation system

During transport and storage there will be a heat leak from the ambient to the liquid CO_2. Also, when loading and unloading, heat will be transferred to the CO_2 due to e. g. cooling of the on-site piping and distribution system. A heat leak to the system will cause the pressure to increase. In order to maintain the pressure, some CO_2 must be purged, or re-liquefied. The total installed power for the re-condensation unit will be approximately the same as the heat leak to the tanks. E. g. a heat leak of 1 MW will require a 1 MW re-condensation unit. The required power will be lower, as the re-condensation unit will not continuously run at full capacity.

A typical re-condensation unit is shown in the below figure. Flash gas from the storage tank at 8 bara is compressed in two stages to a high pressure e.g. 65 bara, before it is cooled to -30°C by an ammonia refrigeration unit. The CO_2 is then expanded to a

pressure of e.g. 40 bara. If large amounts of nitrogen (>10 mole %) is present in the gas, some gas must be purged. The purge gas will consist of approximately 60-70% nitrogen and 30-40% CO_2. The liquid is then expanded to tank pressure and sent back to the storage tank.

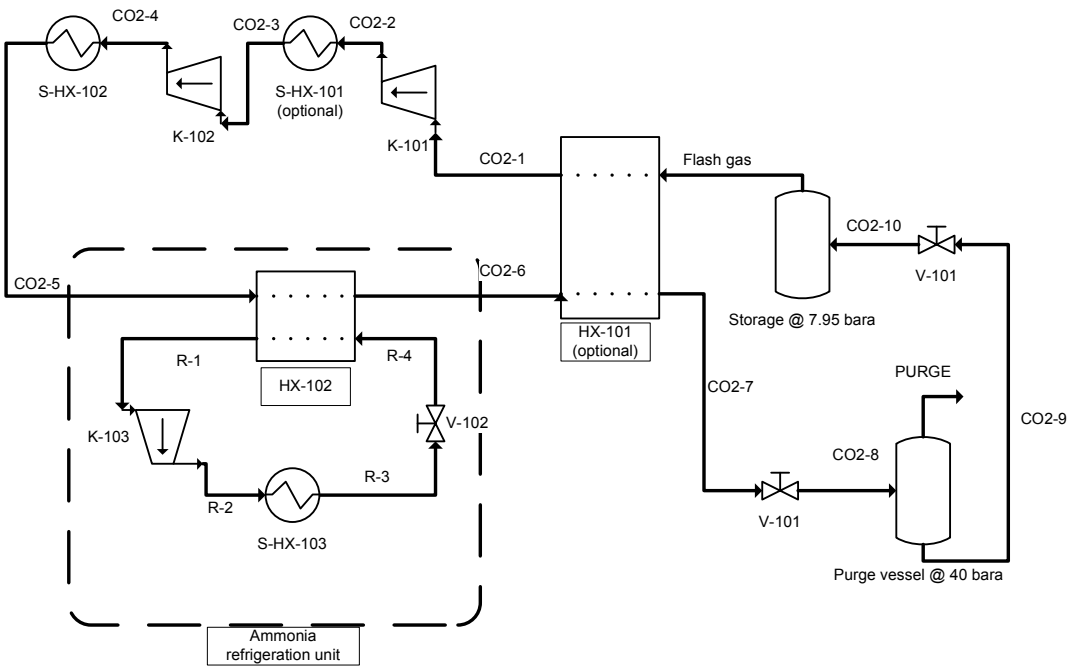

Figure 2-21 Typical design of the re-condensation system with ammonia refrigeration unit. Source: Gassco

The next figure shows the total loss and the loss of nitrogen and CO_2 as a function of nitrogen concentration in the flash gas for the proposed re-condensation unit. From the figure we see that small amounts of nitrogen and CO_2 needs to be purged already for nitrogen concentrations of 5%. If the nitrogen content is 20%, about 25% of the flash gas will be purged; at 50% as much of 65% of the gas will be purged.

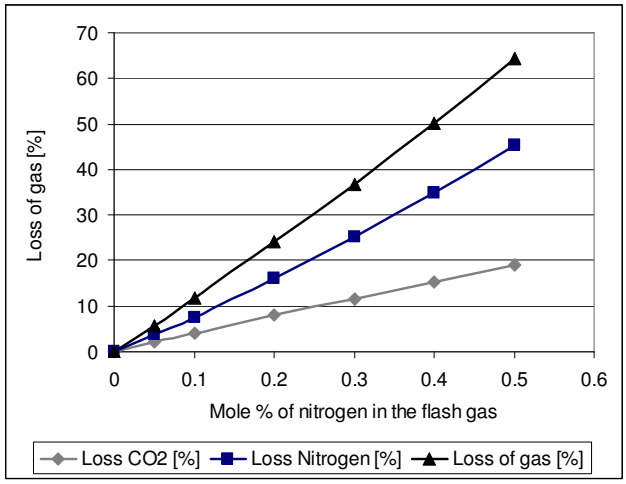

Figure 2-22 Loss of nitrogen and CO_2 as a function of nitrogen concentration in the flash gas

The concentration of nitrogen in the flash gas will decrease rapidly after start-up of the re-condensation unit. Hence, nitrogen and CO_2 will only be purged in the beginning. It should be noticed that the amount that will be purged is negligible and that there will be marginal changes in the gas composition. Furthermore, since nitrogen is purged, the quality of the CO_2 will increase.

The nitrogen content in the flash gas and the pressure increase in the tank system could be reduced by installing a "spray system" is installed at the top of the tanks.

Figure 2-23 Example of small CO_2 condensation system

During ship-loading at the CO_2 sources, the storage will unload continuously to the ship-export pipeline. This will decrease the pressure in the tank. A trim heater may be required to maintain the pressure.

2.4.6 Jetties and onshore (un)loading facilities

Kårstø
The Kårstø site is today an already intensively used loading and discharge location for liquefied gas carriers, as such it can be assumed that existing jetties can be used. New CO_2 loading arms and related equipment must be installed. As mentioned before two loading arms are needed to allow for the cargo flow and the vapour return whilst loading/unloading the vessel. Due to the fact that CO_2 on and offloading at Kårstø is a novelty a detailed HAZOP analysis must be performed (though based on existing procedures for existing CO_2 carrying vessels) parallel to a full risk assessment as will be required by the Kårstø facility operator and regulatory framework (both national and EU regulations).

Mongstad
Like Kårstø also Mongstad has a considerable ship/shore interface, further detailed scoping and due diligence work should lead to adequate estimates of what is needed to be done on this site. It is certain though that (2) new loading arms would need to be installed here parallel to liquefaction and intermediate storage capacity.

2.4.7 Vessel

A combined CO_2/LPG[3] carrier mitigates the investment risks since an alternative trade service capability is available and consequently prevents the obsolescence or waste of the CO_2 carrier in the event the CCS project is cancelled after the pilot phase or when unforeseen longer term downtime occurs.

Cases 1, 2, and 3 are based on the same route (Kårstø to Utsira formation) although with different annual throughput volume requirements. A common characteristic of the vessel for case 1, 2 and 3 is the requirement for dynamic positioning (DP) capability. The DP capability is required for connecting to the specific offshore discharge solution and might be required during the discharge operation. The latter requirement depends on the offshore discharge infrastructure solution selected, since some of these solutions allow the tanker to moor to the offshore unit.

The 4th case adds a diversification of the CO_2 supply to the Utsira formation via blending in the Mongstad flow into the pipeline volumes of Kårstø. This trade is defined as port to port, and as such a less complex vessel can be used, i.e. a 'regular' gas carrier without DP capabilities.

From the logistic study a 6,000 cbm vessel is cited as the most suitable sized ship for the initial case (1mt/yr). However a 6,000 cbm carrier will be too small a vessel to allow for consistent weather uptimes – a larger vessel will offer better sea- and DP- stationary

[3] The transportation conditions of CO2 (-55°C 7-8 barg) are quite similar to that of Liquid Petroleum Gases, these are kept liquid at maximum -48°C at atmospheric pressures, or higher temperatures at pressures up to 9-12 barg

keeping characteristics, since the overall bigger size will be less influenced by the prevailing weather conditions. For illustrational purposes the 6,000 cbm vessel is taken into account here.

Based on required carrying capacity typical dimensions of the needed vessels are given below.

Table 2-6 Typical vessel dimensions

VESSEL	3,000 cbm (port to port)	6,000 cbm (offshore discharge)	30,000 cbm (offshore discharge)
Loa [m]	92	115	205
B [m]	15.3	16.8	32
D [m]	8.6	9.8	16.8
T [m]	6.6	7.8	11
Deadweight [t]	4,600	7,200	36,000
Speed [kts]	14	14	15

Cargo containment will come from independent Type C (IGC-Code) tanks, the exact number and sizing of these pressure vessels is subject to further engineering. The tanks will allow for certain pressure and temperature conditions, designed as pressure vessels and insulated to reduce heat ingress.

2.4.8 Onboard CO_2 conditioning

In cases 1, 2, and 3, the CO_2 will be conditioned to the required injection parameters of the Utsira formation. These injection parameters are kept in line with the pipeline concept and therefore set at 50 bara and 5°C for the first two options given below.
Due to the lack of injection simulation and subsequent uncertainties on the conditioning equipment requirements, costs are only given here for illustrational purposes based on a 3rd option described further below.

Onboard equipment for the CO_2 conditioning shall consist of cargo pumps, booster pumps, seawater heat exchanger, and an additional fired heat exchanger, assuming liquid phase injection. TNO provided calculations for the required duty determination:

i. based on either the concept that the product flow line can be used as a heat source (heat ingress from surrounding ambient seawater) to avoid heating onboard the ship,
ii. or based on heating onboard the ship to obtain the required injection parameters

The calculations were performed with OLGA simulation software and are courtesy of TNO Oil and Gas. The third option is an option where parameters were set at:

iii. 70 bara and 0°C and heat sources used were seawater heat and residual heat from the ship's systems, furthermore this was done for the 1MTA volume scenario only.

Option I: Usage of surrounding seawater heat conduction to product flow line for heating of the CO2 upon injection

Goal: the required length of a flow line to heat up the fluid just by heat transfer with the surrounding water was estimated to assess the feasibility of such an optimisation.

The off-loading rate is assumed to be 800 m3/hr and an 14" OD line (with standard wall thickness). With this diameter the fluid velocity is approximately 2.5 m/s. In the best scenario a non-insulated tube was assumed. This results in a typical overall U-value (heat transfer) of U=200 W/m2K.

Furthermore TNO calculated with two offloading pressures (at the injection wellhead) of 8 and 50 bara.

Table 2-7 Parameters for heat transfer calculations trough the product flow line

Parameter	***Value***
Inner diameter [m]	0.33655
Mass flow rate [kg/s]	260.22
U-value [W/m^{2}K]	200
Sea water temperature [degC]	5

In the graphs below, the pressure, temperature and void fraction are plotted as function of the axial length of the pipe. To heat up the fluid to near sea-water temperatures prior to its injection will take several kilometres of pipeline length. The pressure drop in the line is relatively high. Therefore, it is unlikely that this is a feasible solution.

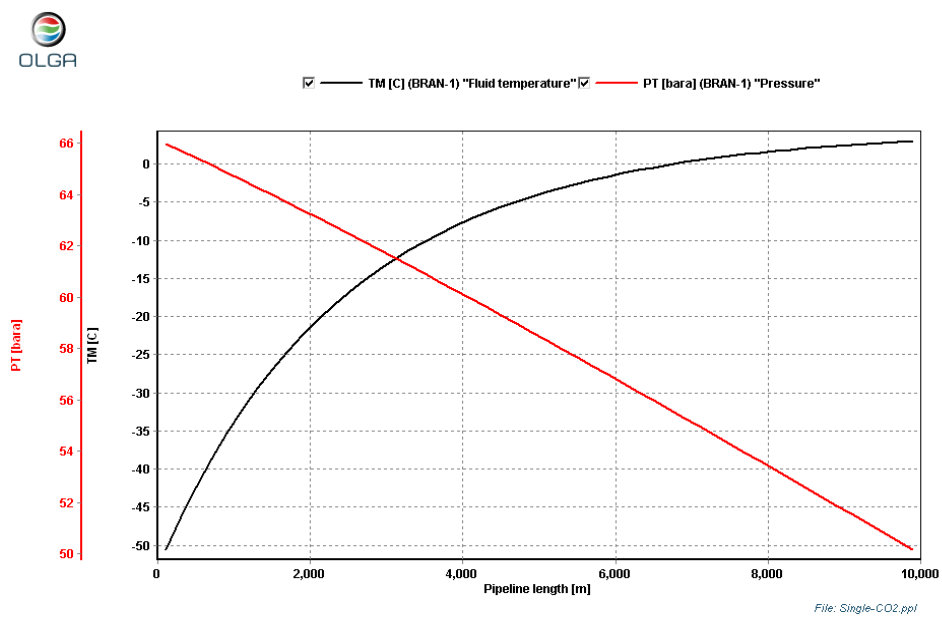

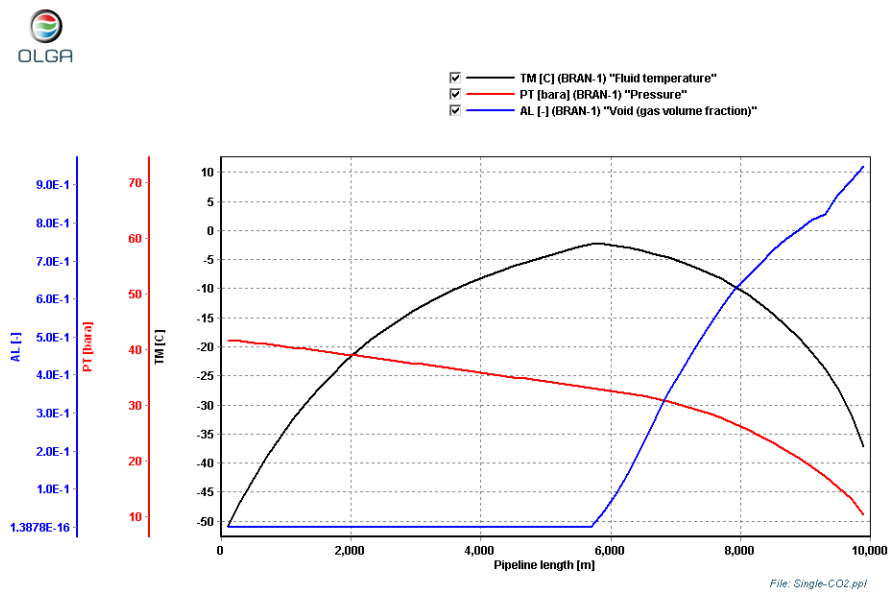

Figure 2-24 Pressure, temperature and void fraction as function of pipe length for 50 bara (top graph) and 8 bara (bottom graph).

In the second case where the injection pressure is targeted to be kept in line with the storage pressure, the evaporation of the product will cool it down (Joule-Thompson effect) and therefore eliminates such a solution.

Option II: Conditioning duty needs on board the ship

The liquid CO_2 in the ship is stored at a pressure of 7 barg (P=8 bara) and a temperature of -55°C (T=-55°C). The injection conditions are typically at a pressure of 50 barg and a minimum temperature of 5°C.

The most probable means to achieve these conditions is to pump the fluid first to 50 barg, the required energy cost is estimated at about 1.87 MW. A total heating capacity of 50 MW is required, which can be achieved partly with seawater and partly with other heating systems (such as waste heat on board, fired heat – thermal oil).

Alternatively is investigated if another heating system can be omitted and heating duty can be achieved from seawater only. As a guideline, a maximum of 10°C cooling of the water is taken. Heating duty with seawater requires a seawater flow rate of about 4000m3/hr. This is equivalent to a pumping capacity of about 300kW (with total pressure drop of about 2 bar).

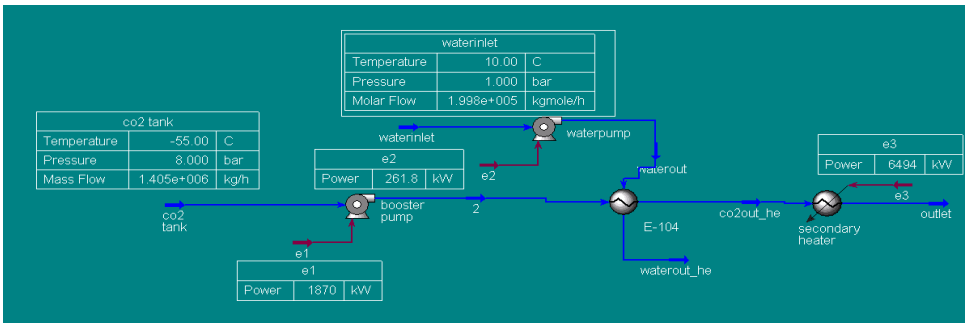

Figure 2-25 Booster plan for storage CO_2 to injection conditions

Detailed injection simulation will determine the injection rates and conditions. The simulation will take into account the subsurface conditions and the well design (tubing & casing). From these simulations the heat and material balances for CO_2 conditioning are determined allowing for more accurate duty specifications onboard.

The injection rates taken in Options I & II are very high and therefore not feasible for a single injection well. However from a shipping logistic point of view even higher injection rates are desirable. Higher injection rates reduce the unloading time, hence directly related to the connection period offshore. The shorter the connection period offshore the shorter the offshore operation period is subject to (bad) weather related influences. Higher injection rates reduce the influence of bad weather conditions, hence limit the influence of weather conditions (positively impacting the uptime for the operation).

The results of the calculations are highly influenced by specific injection requirements. Consequently no general design parameters can be derived from the calculations, and the results presented here are only for illustrational purposes, and/or this specific case.

Option III:
As mentioned previously a third option in relation to the onboard conditioning was calculated. The CO_2 conditioning consists of basically two processes. First the liquid CO_2 has to be pumped from the about 7 bara of the cargo tanks, and up to a transfer pressure which may be in the range of 70 bara or more. This is likely done in two stages, with submerged cargo tank pumps providing a typical pressure increase of about 10 bar, while the rest is obtained by booster pumps on deck.

The second process is a subsequent heating of the CO_2 so as to inject it at the desired 0°C or above at the wellhead. This way there should be no risk of freezing of reservoir water, nor of unloading equipment and sub-sea pipes and as such this is a conservative (safe) assumption. It is possible that injection at below zero temperature at well-head could work but this is not sufficiently documented at present and has not been considered here.

As shown in Option I the cargo heating may be carried out by using a 5 to 10 km subsea pipeline as heat exchanger, drawing heat from the surrounding seawater which even in

the bottom seawater of northern areas seem to above about +4°C. This would however lead to significant icing in equipment and connections. It would also lead to significant thermal cycling due to stops in unloading between ships. We are thus basing this study on the conservative assumption that the Dense Phase CO_2 has to be heated onboard. The CO_2 will thus have to be heated from the about -50°C it will have at 7 bara, by onboard heat exchangers. The pumping itself will increase the temperature with a few degrees to about -47°C. The rest will have to be performed by either heat from seawater, by utilisation of onboard waste heat or by intentional firing. The latter should of course be avoided and the onboard waste heat will certainly not be sufficient.

The heating process considered is as described in the below figure.

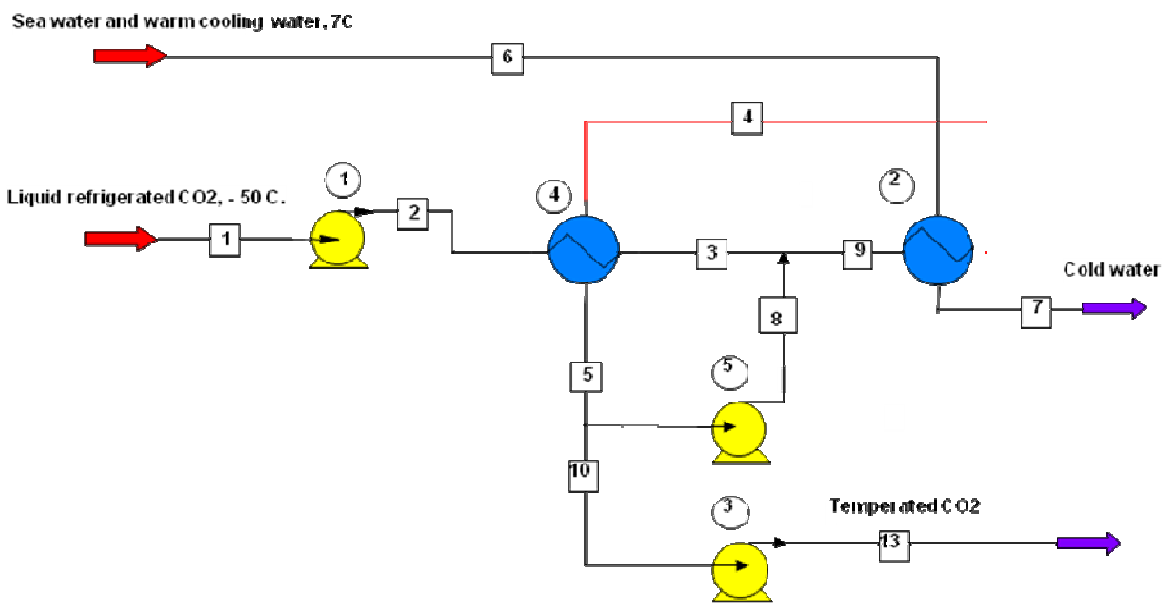

Figure 2-26 Schematic Diagram of CO_2 Heating Process.

The process sketched uses a combination of engine waste heat and seawater. It uses CO_2 as heating medium. The cold CO_2 (-50°C) is pumped from 7 bar to 70 bar in pump no 1. In heat exchanger no 4 the cold CO_2 at -47°C after pumping is heated with a larger quantity of "warm" CO_2 at about +5 deg from heat exchanger 2. In heat exchanger 2 the CO_2 will be heated with warm sea water as well as waste heat from the ship engines. The temperature in line no 9 will be sufficiently high to avoid freezing the heating water. Note that the volume circulating in the loop shown as line 4 has to be on the order of 5 times the net CO_2 throughput.

Table 2-8 Mass & Heat Balance (indication) of CO_2 Heating Process with 350 t/h capacity.

	1	2	3	4	5	6	7	8	9	10	13
Massflow tonn/h	350	350	350	1 750	1 750	1 350	1 350	1 400	1 750	350	350
Temp C	-50	-47	-24	5	0	7	1	0	-5	0	0
Pres bar	7	70	70	70	70	3	3	70	70	70	70+

The process is estimated to require about 3 kWh/t CO_2. With an assumed diesel oil consumption of 220 g/kWh electricity generated, and an assumed cost of 500 EUR/t, the resulting energy cost is about 0.3 EUR/t CO_2 discharged. Should the vessel use LNG fuel this is deemed likely to be prized at equivalent cost per unit of energy. Note that this is for the CO_2 unloading and conditioning only.

2.4.9 Offshore site requirements

Unloading infrastructure is required at the offshore permanent storage location (i.e. Utsira formation). The prime function of the infrastructure is to allow for connection of the cargo manifold and transfer/discharge of liquid CO_2 from the CO_2 carrier cargo tanks to the subsea template/completion into the well head. A secondary function of the infra structure can be to offer the CO_2 carrier mooring.

The system must offer the highest economical uptime possible and allow for a simple connection-, discharge-, and disconnection- operation. Several offshore service providers are able to offer services and equipment and two examples are given here. One of them being the Catenary Anchor Leg Mooring (CALM) whilst the other solution is a Submerged Turrel Loading (STL).

The CALM[4] is a floating buoy that performs the dual function of keeping a tanker moored on a single point and transferring fluids (generally crude oil or refined products) while allowing the ship to weather-vane. The circular floating buoy is anchored by means of multiple chain legs, providing the restoring force, and fixed to the seabed by either conventional anchor legs or piles. The buoy is free to move in all directions.

The tanker is moored via hawsers to the turntable connected to the buoy via a roller bearing arrangement. The tanker is loaded or offloaded by means of flexible marine hoses attached from the buoy to the vessels manifold. The connection between the piping inside the buoy and the sub-sea pipeline is also by means of flexible hoses. An illustration is given in the below figure.

[4] Source: www.sbmoffshore.com

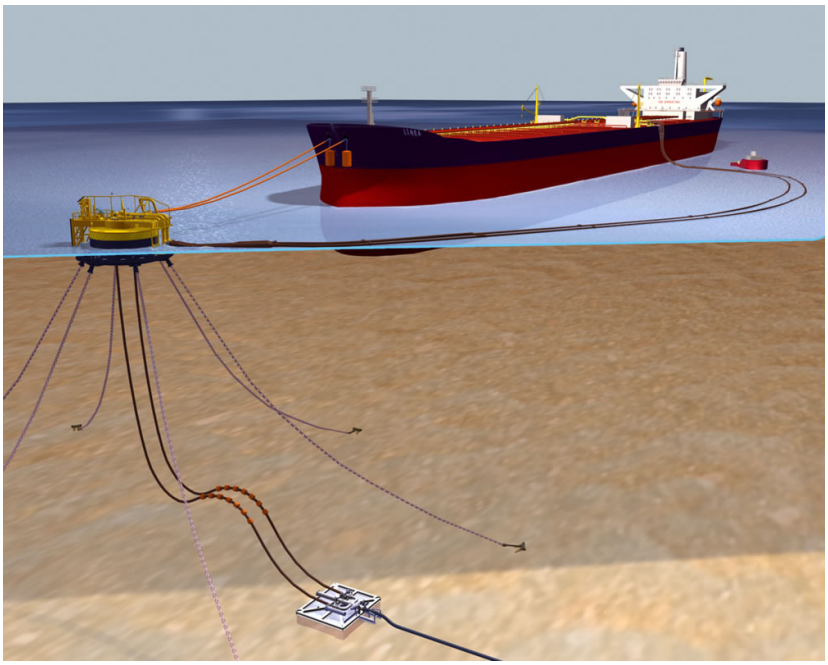

Figure 2-27 CALM layout. Source: www.sbmoffshore.com

The above is given as an illustration since more detailed data is needed to derive a final concept of the offshore offloading infrastructure. Some considerations for selecting the infra- structure are typical injection pressures, connection type, local prevailing weather conditions (wind, current and wave data), soil conditions, mooring capabilities and maximum impact on the hoses/risers.

Another example of an offloading infrastructure is the **STL offloading system.**
How offloading and injection of CO_2 into a reservoir/geological formation is most effectively done will to a large degree depend upon water depth and weather conditions at the discharge and storage site. It will also depend upon the type of storage reservoir, whether a Saline Aquifer (SA) or Depleted/producing Oil and Gas Field reservoir. The limited scope of this study has made it necessary to simplify this, by only describing what is considered to be typical solutions with associated approximate cost estimates. No attempt has been made to optimize choice of solutions as this depends too much on actual site conditions.

The offloading of CO_2 offshore will use basically the same equipment and technology as is extensively used to load oil offshore. This technology is well established although some changes to materials and equipment used may follow as a consequence of lower temperatures and higher pressures. Such low temperature and high pressure equipment does however exist and this is not seen as a significant issue

There exists a number of different offshore loading/discharge solutions, from submerged hoses and buoys to fixed bottom supported platforms. The choice depends primarily on water depth. In shallow waters fixed towers may be suitable, while in

waters with a depth above say 50m, buoy solutions are likely to be most cost effective. In addition to water depth, weather conditions are important. For simplicity we have in the following chosen to assume a Submerged Turret Loading/unloading or STL buoy. This is a relatively expensive concept but it is suitable in most water depths and has a high degree of availability under harsh weather conditions.

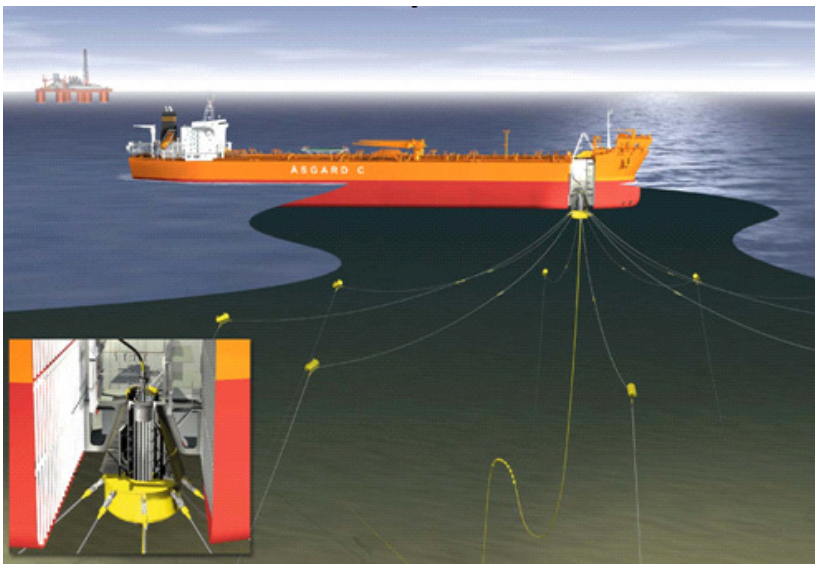

Figure 2-28 Submerged Turret Loading/unloading (STL) concept.

The conditioning of CO_2 prior to wellhead injection will depend upon the reservoir and well requirements. Most of the storage capacity available offshore in the European area exist in Saline Aquifers, typically at 1000 m depth or more. Here injection is suitably done with the CO_2 in dense phase and relatively warm, see the CO_2 Phase Diagram shown in the below figure. Keeping the pressure and temperature with some margin above the vapour line, say at 50 bar and 0°C, the risk of two phase flow as well as freezing of water, is avoided. This will require pumping up to somewhere in the range of 70 bar pressure onboard the ship, plus additional heating to increase the temperature before discharge.

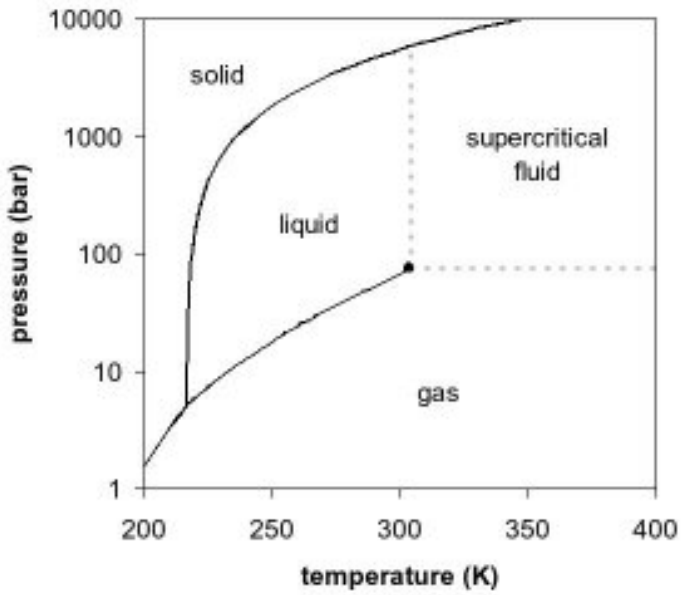

Figure 2-29 CO_2 phase diagram

It should be noted that if the CO_2 is to be stored in a Depleted Gas reservoir, the pressure in such a reservoir may be quite low, possibly in the range of 1-2 bara. For injection into such a reservoir it may be necessary to reduce the CO_2 pressure significantly as well as to vaporize the CO_2. This will require less pumping but significantly more heating capability. Such a process is not considered in the 3rd conditioning option described above.

STL type Offshore Loading/ Unloading Equipment

The critical operation in any loading /unloading operation offshore is the connection process. This involves the ship manoeuvring to pick up a messenger line and pull in a hawser or wire connected to an (un)loading hose. The STL consists of a conical buoy or plug which is moored to the sea bottom and connected by a submerged hose to a Pipeline End Manifold (PLEM). The plug is submerged when not connected to a discharging ship and equipped with a floating messenger line that will be captured by the ship and used to pull the plug into a mating cone in a specially built turret compartment in the ships forward bottom area. The heaving in of the cone into the bottom of the ship makes this operation less weather dependant than most other solutions.

Recent cost indications for the STL equipment and its installation offshore indicate a cost of about 30 MEUR at a water depth of 70 m. The hose and connection is assumed to be 12 inch ID, which is above what is needed for the smaller ship. It is however assumed that the offshore discharge installation will be designed to accommodate larger ships with higher discharge rates leading to the likely adaptation of a 12 in standard size.

Other offloading solutions such as Submerged Anchor Loading (SAL) will be noticeably less expensive than STL but also providing less weather resilience. For certain sites and availability requirements a SAL solution may reduce the cost with 30 to 50% compared to an STL solution.

In the event of using an STL connection, the DP operation will only be limited to the connection and disconnection operation; the DP costs are excluded from the total investment figure given the uncertainties of the DP power needed in relation to the metoceandata and the eventual offshore offloading solution. The ships need to be built with the Turret room and its associated equipment. This is roughly assumed to add about 2 MEUR to the ship newbuilding price. Note that any conversions will be significantly more expensive.

2.4.10 Case 4 – upside from additional CO_2 flows

Basic assumption for case 4 is the transportation of significant volumes of CO_2 via pipeline from Kårstø to the Utsira formation, as described in Section 2.3. The CO_2 is compressed in several stages to build up pressure prior to entry into the pipeline. Due to the compression significant heating is induced to the CO_2 flow. In case liquefied CO_2 is available, the liquefied CO_2 can be used to cool down the compressed CO_2. This liquefied CO_2 could be shipped in from Mongstad by CO_2 carrier. The liquid CO_2 will be discharged into an intermediate storage location, from where the intermediate storage the inflow of CO_2 can be controlled and used for cooling purposes of the different compression stages needed to send of the CO_2 to the Utsira formation.

TNO received data from Siemens in relation to the different compression stages. TNO calculated the parameters for use of the liquid CO_2 in the cooling cycle.

The intermediate storage conditions at Kårstø are pressure of 7 barg (P=8 bara) and a temperature of -55°C (T=-55°C). The offloading velocity is 90m3/hr.

Table 2-9 Parameter for intermediate storage

Parameter	Value	
Pressure	8 bara	
Temperature	-55°C	
Density	1171 kg/m^3	
Specific heat	1930 J/kgK	
Offloading rate[5]	90 m^3/hr	29.3 kg/s

In a typical compression for CO_2 about 6-7 compression stages will be present, which is indicated in the figure below. Intermediate pressures of about 8 bara will be present which would be ideal for hooking in the intermediate storage offloading line. The mass

[5] This is the rate of the flow from intermediate storage to the flow entering the pipeline, the discharge rates of the vessel into the intermediate storage are assumed higher (800t/hr).

flow rate of 29.3 kg/s is appropriate. In case the total train is dimensioned at 3 Mt/year (95 k/s), the added flow is about 25% of the new total. In principle a train will be designed to be operated between 70%-100% load.

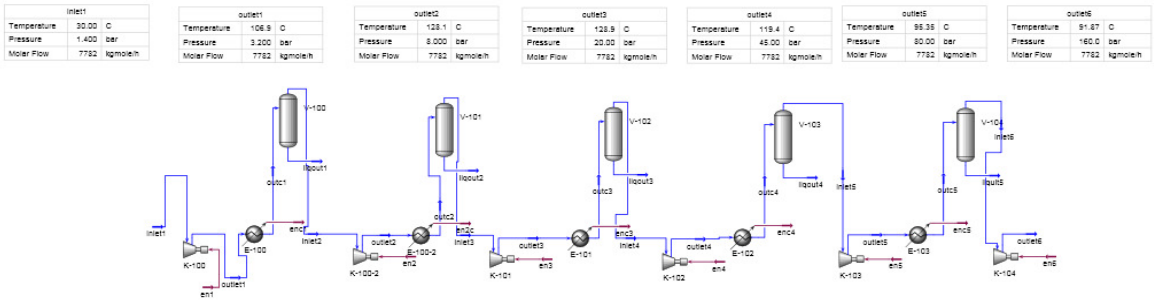

Figure 2-30 Compression train

A secondary use of the offloading cold temperature is to use this line as cooling for one of the cooling steps. The typical required cooling power (for a flow rate of 95 kg/s) is about 9MWatt. The cooling capacity of the offloading fluid is about 6MWatt.

3 TECHNOLOGY EVALUATIONS

In this section, evaluations on the status on relevant knowledge related to CO_2 transport for the Kårstø case is presented, including an evaluation of the need for further technology development.

3.1 Pipeline alternatives

CO_2 has been transported in carbon steel pipelines for more than 30 years in North America, and injection of CO_2 into saline aquifer from the Sleipner installations has been performed for more than 10 years in the North Sea. Thus, it might be expected that sufficient knowledge is available for designing also the transport solution in the Kårstø case. However, there are some significant differences between existing systems for transport of CO_2 and the Kårstø case:

- Existing pipelines in North America are onshore pipelines, sectioned with valve stations regularly along the pipeline route. Maintenance and repair philosophy for onshore pipelines and offshore pipeline are significantly different, and the consequences of having to perform corrective maintenance on offshore pipelines are severe, both with respect to costs and repair time, compared to similar maintenance for onshore pipelines.
- Sectioning onshore pipelines allow for the possibility of internal inspection using pigging equipment of short pipeline sections, rather than having to perform one long inspection run over the total length of the pipeline. Wear of soft materials on the pigging tool (rollers, disks) may imply challenges related to using the tools over such long distances.
- Existing systems for injection of CO_2 in the North Sea (Sleipner) have only short piping sections upstream of the well head. These piping sections are designed in (exotic) materials other than those included as a basis for the Kårstø case.

Thus, for pipeline transport of CO_2 in the Kårstø case, the following technology issues need to be addressed:

- The effect of impurities in the CO_2 stream, including the content of water. Effects and cross-effects of impurities are not fully understood for dense of liquid phase CO_2 transport. This can be handled by using a conservative approach to the allowed levels of impurities (which will impact costs for the purification process), or by performing R&D activities to further understand such effects. For the Kårstø case, WP4.3 will refer to the recommendations given by WP3.1 (see *D3.1.1*) with respect to allowable CO_2 composition.
- Simulation tools have been developed to analyse both the behaviour of the CO_2 in the pipeline, as well as dispersion of CO_2 from a planned or unplanned release. There is, however, a lack of data from actual practice which would be used to calibrate the simulation tools. Although the results from such tools are considered sufficiently suitable for its purpose, availability of data from actual

practice would add further comfort to the results from the analyses. Until such data are available, a conservative approach should be used when evaluating safety requirements and capacity results.

- Under pressurised conditions, CO_2 may be absorbed by some elastomers and other soft materials. Then, during rapid decompression, the absorbed and expanding CO_2 may not diffuse out of the soft material quickly enough, causing blisters and other damage to the material. Normally, soft materials used in existing CO_2 systems have been tested on an individual basis for the purpose of each material and each system. Thus, no general standards have been developed for such materials for pressurised CO_2 service. This probably does not represent a major challenge for pipeline based CO_2 transport, but particular focus should be put on testing materials for the operating conditions relevant for each project.
- If there is a need for depressurizing the pipeline, a vent stack needs to be installed, normally in one end of the pipeline. Release of high pressure dense phase CO_2 into the atmosphere will result in high noise levels, typically up to 160-170dB(A) at 1 m distance. This would imply either an extensive safety zone around the vent stack, or construction of a "silencer" around the nozzle of the vent stack. If such a "silencer" is to be installed, the design needs to ensure that sufficient dispersion of the CO_2 cloud is still possible, i.e. so that the design does not interfere the flow pattern of the release in an unacceptable way.
- Propagating longitudinal fractures may represent a challenge for CO_2 pipelines compared e.g. to gas pipelines. If a longitudinal fracture is induced, the length of this crack is determined by the strength in the pipeline material over the relevant section, as well as the relationship between pressure reduction on the CO_2 medium in the zone around the tip of the propagating crack. If the tip of the crack moves faster than the pressure reduction in the CO_2 medium, the crack may develop over the entire length of the pipeline section having the same strength –at least theoretically. We need to better understand this mechanism. Until such knowledge is available, a conservative approach should be used in calculations of the pipeline's ability to withstand such cracks, as well as evaluating installation of fracture arrestors (small sections of pipeline having higher material strength than the pipeline in general) along the pipeline.

3.2 Ship alternatives

Despite the existence today of several CO_2 carriers and the successful operation of these in the past and present, the main challenges for the proposed concept of standalone offshore discharge are summarized below:

- The design of the CO_2 conditioning equipment onboard exists on a conceptual level, process simulation and equipment sizing has been performed for a specific case and based on extensive injection simulations of (liquid) CO_2 – unfortunately this knowledge cannot be used in this report due to confidential nature of this work. In order to design the CO_2 conditioning equipment that can handle and provide the needed injection parameters, the starting point is the storage location itself; therefore further in depth analysis has to be performed on

the basis of geological engineering and injection simulations to allow for a proper CO_2 conditioning equipment design.

- Offshore offloading infrastructure is not a novelty although it is new with respect to CO_2. CO_2 -specific characteristics require further engineering on this part of the scope in relation to the encountered pressures (temperatures should not be an issue since cryogen injection is unlikely), soil data and especially metocean data (meteorological data and data related to sea currents and wave heights) related to the analysis.
- An HAZOP analysis has to be performed for the offshore discharge part of the offshore operation.
- Current regulations (IGCC, IMO, industry driven and class regulations) allow for the safe and regulated transportation of (food grade) CO_2, Anthony Veder is in the process of performing a safety analysis with DNV to assess the risks of large scale CO_2 transportation for offshore injection and a Germanischer Lloyd approval for transporting CCS grade CO_2. Anthony Veder does not expect major hurdles on the regulatory track to allow for CO_2 transportation in the light of CCS.

4 ECONOMIC EVALUATIONS

In the current section, the economic analyses for the pipeline and ship alternatives are evaluated, respectively In addition, a comparison between the ship and pipeline alternative is made for the different volume alternatives.

Being a case study, cost estimates should be as representative for the actual technical solution as possible. Within the budgets and resources allocated for the CO2EuroPipe project, specific engineering is, however, not possible. Thus, the cost estimates are derived from relevant similar studies performed by the participants within WP4.3. Simulations and evaluations with respect to obtaining as relevant technical and cost data have to some extent been performed and according to the evaluation of the participating companies within WP4.3, such data are to a large degree relevant, thus in a good way making the below cost estimates relevant for the case described in this report.

4.1 Pipeline alternatives

4.1.1 Cost estimate assumptions

The following definitions and/or assumptions have been adopted in establishing the CAPEX costs detailed within the above:

- Technical cost is defined as the pipelines and structures; their materials, procurement, construction and installation.
- Technical allowance for the pipeline material is set at 10% for the onshore section and 3% for the offshore main section.
- Synergy assumed between vessel operations in the field and the landfall operations
- No onshore or offshore facilities shut-down period.
- Offshore installation slowdown due to pull-in operations, challenging installation areas near shore and waiting on weather is included, and is taken as 15% of normal installation duration.
- Waiting on weather is included in the operational contingencies.
- PLET and spool require protection covers.
- Rock dumping of each crossing including pipe burial transitions at each end.
- Pipe lay slowdown rates not applied to pipeline crossing activities and anode installation.
- Crossings to be further defined in detail design with regard to burial status of lines crossed.

4.1.2 Cost estimates, pipelines

Cost estimates for the alternative volume cases are given in the below tables. All costs are given in 2010 currency and based on 2010Q2 cost levels.

Table 4-1 Investment costs 8" CO_2 pipeline - Kårstø case

Description	Total Cost [M€]
1. Contractor Management & Administration	4,3
2. Pipeline Material & Installation	123,5
3. Structures & Spools - Material & Installation	18,3
4. Commissioning	4,3
5. Third Party Verification & Studies	2,8
6. Operator Project Team	8,5
7. Insurance	4,3
8. Onshore pig launcher / vent facilities	17,3
Sub Total	183,2
9. Contingency	41,5
Total Project Costs	**224,7**

Table 4-2 Investment costs 12" CO_2 pipeline - Kårstø case

Description	Total Cost [M€]
1. Contractor Management & Administration	5,2
2. Pipeline Material & Installation (224km)	153,9
3. Structures & Spools - Material & Installation	18,5
4. Commissioning	5,2
5. Third Party Verification & Studies	3,4
6. Operator Project Team	10,3
7. Insurance	5,2
8. Onshore pig launcher / vent facilities	17,3
Sub Total	219,0
9. Contingency	50,4
Total Project Costs	**269,4**

Table 4-3 Investment costs 16" CO_2 pipeline - Kårstø case

Description	Total Cost [M€]
1. Contractor Management & Administration	6,2
2. Pipeline Material & Installation (224km)	188,7
3. Structures & Spools - Material & Installation	18,8
4. Commissioning	6,2
5. Third Party Verification & Studies	4,1
6. Operator Project Team	12,4
7. Insurance	6,2
8. Onshore pig launcher / vent facilities	17,3
Sub Total	260,0
9. Contingency	60,7
Total Project Costs	**320,7**

Notes to Table 4-1 through Table 4-3:

a) Total technical cost can be summarised as item no. 2 & 3 in the table above & includes technical allowances.
b) Contractor Management & Administration is taken as 3% of the total technical cost .
c) Commissioning is taken as 3% of the total technical cost.
d) Third Party Verification and Studies is taken as 2% of the total technical cost.
e) Operator Project Team is taken as 6% of the total technical cost.
f) Insurance assumed to be 3% of total technical cost.
g) Contingency is taken as 25% of all costs, i.e. item 1 to 8.

Investment costs for the compressor alternatives are given in the below table. As it can be seen from the table, installation costs are the most significant part of the investment. Here it is assumed that the compressors are installed outside the areas requiring the most significant safety precautions with respect to installation methods.

Table 4-4 CAPEX for the compressor system in the pipeline alternatives

	Required power [MW]	Capex [MEuro]	Installation [MEuro]
Case A	12.3	9.5	51
Case B	41.1	24	129
Case C	65.8	26	140

4.1.3 Investment profile and operating costs, pipeline

An offshore pipeline project in northern waters needs to be planned so that installation of the pipeline is performed between April and September. That implies that a typical investment profile for an S-lay pipeline project can be derived, and for the Kårstø case such a profile is given in the below table.

Table 4-5 Typical investment profile for a S-lay pipeline project

General investment profile (% each year)	IY minus 2 years	IY minus 1 year	Investment year (IY)
	13 %	31 %	56 %

In a case where the Kårstø pipeline was to be installed in the lay season of 2013, i.e. ready for operations in October 2013, this would result in the investment need as given in the below table.

Table 4-6 Example: Investments for a Kårstø pipeline ready for operations in 2013. Annual escalation is given as 2%.

Kårstø case	Size	Pipeline cost (M€)	Investment profile (M€)		
			2011	2012	2013
1 Mt/y	8"	225	29,8	72,5	133,5
3 Mt/y	12"	269	35,7	86,9	160,1
5 Mt/y	16"	321	42,5	103,4	190,6

Pre-operational costs

It may be expected that operation of CO_2 pipeline systems may be carried out by organisations already responsible for similar infrastructure operations, e.g. like oil or gas pipelines. Then, in addition to project activities associated with procurement and installation of the pipeline system itself, the organisation responsible for the operations of a CO_2 pipeline will need to establish procedures and systems to integrate this into its other activities. Such activities will include:

- Integration of the CO_2 pipeline system into existing control room systems related to monitoring and control of the pipeline, including development of pipeline modelling and simulation tools
- Spare parts administration and implementation of a repair philosophy
- Establishment of maintenance programmes
- Prepare the inclusion of the CO_2 Transport pipeline into existing HSE-related documentation, such as the Emergency Response Plan.
- Development of communication systems and procedures
- Development of monitoring plans and mitigation plans

Costs for such pre-operational preparations are to a large extent independent of the investment levels for the pipeline itself, as the same systems are necessary for any pipeline, regardless of length or diameter. The costs are to some extent dependent of the requirements relevant within the operating organisation, and also to the degree of already implemented systems for similar operations (e.g. systems already installed for control and monitoring of oil and gas pipelines).

Assuming that the CO_2 pipeline is to be technically operated from a control room already prepared for operating oil or gas pipelines, typical pre-operational costs will be in the range of 2 to 4 M€, and can be assumed to incur in the investment year (~75%) and the year before (~25%).

Operational costs

Operational costs for a CO_2 pipeline includes:

- Daily operations related to monitoring and control of the CO_2 flow in the pipeline
- Regular activities related to monitoring and control of the physical condition of the onshore pipeline, both externally and internally

- Performing analyses, planning of operational and other activities, administration and evaluating technology issues

Monitoring of the physical condition of the pipeline is typically performed in regular intervals, e.g. external monitoring of the onshore pipeline several times during the year, and internal monitoring of the offshore pipeline once every 5 to 10 years.

Assuming that the CO_2 pipeline is operated as an integrated part of several pipelines (CO_2, oil, gas), the OPEX for a pipeline as in the Kårstø case will be ~0.75 M€ every year, except for every 5 to 10 years, when an internal inspection is to be performed, for which the OPEX will be ~3 M€. In the calculations performed in Section 4.3 an average annual OPEX of 1,1 M€ is assumed. Annual OPEX for the alternative pipeline in this report will be the same, independent of diameter.

4.2 Ship alternatives

In this section, the cost build up (investment and operational) for the ship alternatives are given.

4.2.1 Depreciation mechanism for combined Carriers

The value of a combined tanker in LPG mode is determined by the price (on the market) of an LPG carrier of similar tank type, size (cbm) and age (see the below figure). The figure shows that during CO_2 transport the ships' value depreciates much faster against regular LPG transport.

Higher depreciation during CO_2 trade is caused by the requirement to depreciate CO_2 related investments during the CO_2 service contract lifetime. CO_2 related investments are for example DP systems and CO_2 onboard conditioning equipment and offshore discharge installations that allow for connection to the offshore infrastructures.

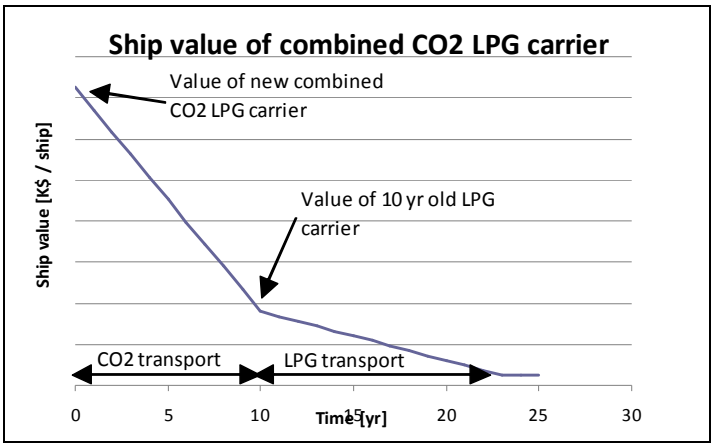

Figure 4-1 Graphical representation of the ships' value in time for a combined CO_2/LPG carrier, which is utilized for CO_2 transport for the first 10 years and for LPG transport after 10 years.

4.2.2 Cost estimates, ship transport

Capital related expenses (CAPEX)
Capex includes the vessel and its onboard conditioning equipment (for cold transfer and in transit needed equipment), a Weighted Average Cost of Capital (WACC) of 7% is used in the annuity based repayment profile for the asset financing. Building interest is assumed to be 5% of the total investment. The economic lifetime of the vessels is set at 25 years. Construction costs are based on 2010 price levels.

Operational expenses (OPEX)
Fixed OPEX: The fixed operational expenditures consist of crewing, maintenance, management, insurance and dry docking (bi annual dry docking is common market practice) costs. All costs are based on 2010 price levels.

Variable OPEX: The variable OPEX depends on fuel, port, other transit costs and the costs of consumables. It is mainly driven by the fuel consumption of the ship for propulsion, and dynamic positioning (DP). Offshore discharge consumes a substantial amount of energy and is dependent on the field's injection requirements. Since no detailed injection simulation was performed these injection costs are excluded though the injection costs of Option III are taken as a separate cost block in line with the described injection case in the economic evaluation. DP costs are also excluded. All costs are based on 2010 price levels.

In the following table one can deduce the costs of shipping CO_2 to and from the described locations for the four defined different cases.

The conditioning and dynamic positioning equipment costs depend highly on the actual case and the subsequent detailed engineering. The calculations have been carried out on a high abstraction level, and consequently no general rules and especially no general costs can be derived. Determining the offshore discharge infrastructure is based on a

case-by-case situation as well. Selection depends on arguments as given before which are highly case specific.

Table 4-7 Cost summary on a Euro per ton basis for the different cases

Case	1	2	3	4
Annual Volumes [mmtpa]	1.0	3.0	5.0	0.6
Investments [Mill. EUR]	24	57	114	17
OPEX Fixed [EUR / t]	1.90	0.80	1.00	2.90
OPEX Var [EUR / t]	5.50	3.30	3.30	8.20
Freight cost [EUR / t]	10.15	6.30	6.90	14.35

Case 3 is for 2 X 30,000cbm vessels, the reason for having a higher unit price is due to the lower utilisation rate when compared to the 1 X 30,000cbm solution. Fuel used here is HFO (USD550/t); given strict emission rules in reality fuels used will be either MDO or even LNG.

Costs for Offshore Discharge and CO2 Processing are given in the below table.

Table 4-8 Costs for Offshore Discharge and CO_2 Processing

Ship size m3	6000	30000
Discharge rate t/h	350	1200
STL Offshore Discharge installation, M€	30	30
Ship adaptation for STL, M€/ship	3	3
Conditioning process equipment, M€/ship	2	4
Sum CAPEX, M€	35	37
Annual maint. Discharge Installation, M€/y	1.5	1.5
Annual maint. Ship adaptation, M€/y&ship	0.15	0.15
Annual maint. Process equipment, M€/y&ship	0.1	0.2
Sum OPEX, M€/y	1.75	1.85
Process Energy cost, EUR/t	0.3	0.3

Note that these figures are on a low level of accuracy but should be useful for adding with other low level accuracy cost figures in achieving an overall magnitude of the cost of ship transportation of CO_2.

Liquefaction of CO_2 is a significant cost element in the ship transport chain, and cost estimates are given in the below table. Costs related to recondensing facilities are included in the estimates.

Table 4-9 Liquefaction costs

Volume alternative (Mt/yr)	CAPEX (M€)	OPEX (M€/yr)[6]
1	44	4.4
3	91	13.3
5	123	22.0

Onshore storage and loading

For the 1, 3 and 5 Mt/yr volume alternatives, storage facilities with a capacity of 150% vessel capacity is assumed, allowing for a "buffer" in the case of delays in the ship logistics. Capex and Opex for such facilities at Kårstø are given in the below table. The Opex is set at 2% of Capex.

Table 4-10 Cost estimates for onshore storage facilities, including recondensating system

Storage capacity (m^3)	CAPEX (M€)	OPEX (M€/yr)
4500	24.8	0.5
9000	44.6	0.9
45000	99.0	2.0

Estimates for loading equipment are assumed to be equal for all storage capacity alternatives, and set to:

- Capex: 9.5 M€
- Opex: 2% of Capex, i.e. 0.2 M€

4.3 Cost estimates summary

In addition to the specific assumptions given in the above sections, the following assumptions are the basis for the cost summary:

- First year of operation is 2018.
- No escalation is defined for the cost estimates, and all costs are given as Q2/2010, real currency.
- Annual discount rate is set to 7%. The background for this is briefly discussed below.
- Operating period for the transport system is 25 years. The remaining value of the transport system after 25 years is set to 0.
- The unit cost is given as the NPV(total costs over 25 years) divided by NPV(total volume over 25 years).

The discount rate for the Kårstø case is based on the assumption that unit costs for using the transport system should reflect a risk similar to the one relevant for Norwegian gas

[6] Assuming power cost of 0.058€/kWh and the power requirement as given in Section 2.4.3. The power cost is based on 59 % electrical efficiency and a Norwegian gas price of 0,20 euro/NM^3. This is higher than the power future 2012 for Norway (around 0.048 €/kWh).

transport systems. In these gas transport systems, the transport tariffs are based on a Weighted Average Cost of Capital (WACC) of 7% pre tax. Such level would normally reflect that there is assumed to be a confirmed income of the lifetime of the project.

The cost summary for the pipeline and ship alternatives for the different volume options are given in the below table.

Table 4-11 Cost summary for the Kårstø case

	Ship transport				**Pipeline transport**			
Volume basis (Mt/yr)	NPV CAPEX	NPV OPEX	NPV Total	NPV Total / NPV volume	NPV CAPEX	NPV OPEX	NPV Total	NPV Total / NPV volume
1	141	174	315	27	242	86	329	28
3	264	356	620	18	359	253	612	17
5	343	572	915	16	413	388	801	14

The NPV unit costs are further illustrated in the below figure.

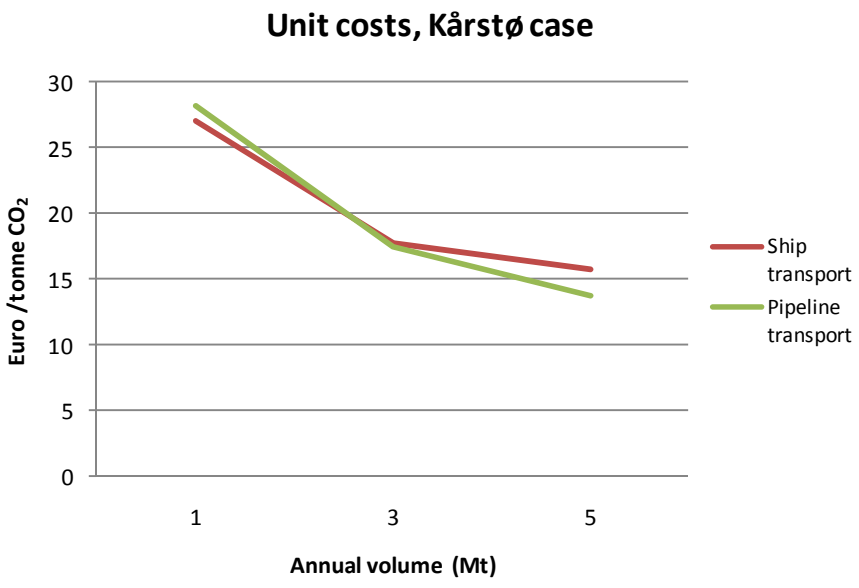

Figure 4-2 Unit cost summary, Kårstø case

5 PROJECT MASTER SCHEDULE

Schedules for specific projects needs to take into consideration market conditions (lead times) and seasonal impact on installation activities, e.g. related to the possibility of laying pipelines during the year. In this section generic schedules for the pipeline and ship alternative for the Kårstø case is given to illustrate the time needed to implement such projects.

5.1 Project master schedule, pipeline

Pipelines in northern waters should be planned to be installed in the period between mid-April and end September. Installation operations may be performed also outside this period during the year, but risk related to weather conditions will then be higher, implying risk for higher costs related to 'waiting for weather' for the installation vessel. Bearing in mind that day rates for such vessels may be in the range of 0.5 to 0.8 M€, high extra costs may be incurred during periods with bad weather.

Planning for necessary engineering and decision processes will then take the lay season for any installation year as starting point, and "calculate backwards" the necessary time needed for planning the pipeline.

In the generic schedule in the below figure, it is assumed that the study, engineering and decision process for the CO_2 pipeline planning period is performed according to a "standard" petroleum industry based governance process, evaluating the project in several steps.

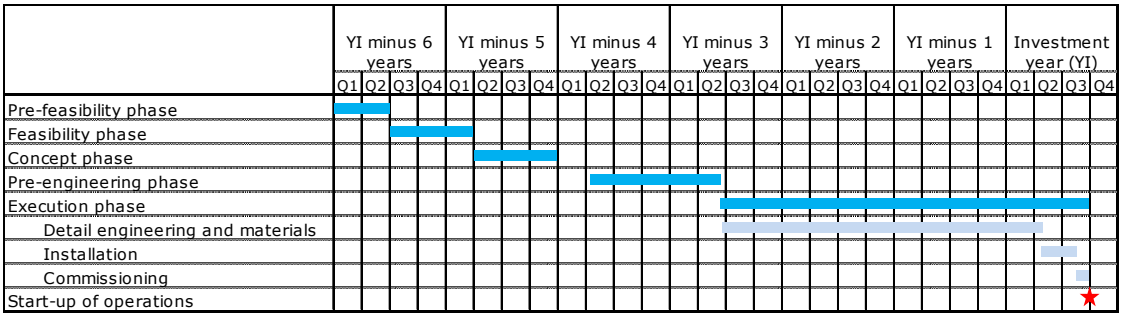

Figure 5-1 Generic schedule for a Kårstø CO_2 pipeline project

In the pre-feasibility phase, the first preliminary evaluations related to technical solutions and cost levels are established. In this phase, no technology qualification is made and uncertainty in the cost estimates are not quantified. The purpose of this phase is to make a decision to start a project, i.e. initiating the feasibility phase.

The purpose of the feasibility phase is to confirm that the alternative technical solutions are feasible, as well as establishing investment cost estimates within an uncertainty interval of +/-40%.

In the concept phase, a selected number of concepts are evaluated to conclude on a recommendation of which concept should be chosen for the final project. In addition, cost estimates are further matured within an uncertainty interval of +/-30%.

The selected concept is then evaluated in the pre-engineering phase. The purpose of this phase is to mature and describe the technical solutions to a degree that enables potential bidders to issue bids for the selected concept. If a concept is well matured in this phase, the risk of large contingencies included in the received bids is less, and it is also less likely that variations to the technical solutions described in the pre-engineering documentation needs to be implemented during project execution (implying high variation costs). Uncertainty in the cost estimates should normally be reduced to +/-20% in this phase.

Project execution consists of the detail engineering phase, the construction phase, the installation phase and the commissioning phase.

5.2 Project master schedule, ship

Typical ship building projects vary in length, all depending of the size of the vessel and the complexity (conditioning and dynamic positioning equipment) of the operation it is to perform.

Furthermore the shipping market and as such the availability of ship yard slots are heavily influenced by demand and supply volatility which is common to shipping market; as such yard slot availability may be reduced significantly in shipping market peaks. For illustrational purposes one could assume that the designing, commissioning and building period is between 24 – 30 month period.

6 COMMERCIAL MODEL FOR THE KÅRSTØ TRANSPORT SYSTEM

The starting point for the Kårstø case is the work initiated by the Norwegian Ministry of Petroleum and Energy (MPE), and performed by Gassco on behalf of MPE related to a CO_2 transportation solution, based on the Norwegian authorities expressed wish to capture CO_2 from the existing gas-fired power plant at Kårstø. The concept comprises a CO_2 pipeline from Kårstø on the western coast of Norway to a dedicated storage location in the Utsira saline formation in the Norwegian Continental Shelf (NCS).

The following section describes the Kårstø project as it has evolved historically, together with some comments on how it might develop further once a decision to capture CO_2 at Kårstø has been made.

Legal, financial, organisational and commercial issues are further discussed on a general basis in a separate CO2Europipe report [*D3.3.1*].

6.1 History of the Kårstø CCS project

The Center-left government which came to power in Norway in 2005 had ambitions to retrofit carbon capture and storage facilities at the gas-fired power plant at Kårstø. Moreover the development plan for a combined heat and power plant at the Mongstad oil refinery was permitted, subject to CO_2 capture being installed.

The intention for the full scale CCS project(s) at Kårstø (and Mongstad) was twofold; reducing CO_2-emissions from the most CO_2-emitting locations in Norway (2.5 million tonnes per year), and more importantly, contribute to technology deployment by developing a full-scale CO_2-capture post-combustion facility at an existing gas power plant. Full-scale demonstration projects for CCS will contribute to lower cost and more efficient technology [*St. Mld 9*].

It has been publicly expressed from Norwegian and international expertise that the Norwegian continental shelf (NCS) contains large possibilities for CO_2 storage, and the Norwegian Petroleum Directorate has been given the responsibility for coordinating the mapping of such CO_2 storage opportunities. The NPD's work is targeted at publishing a CO_2-Atlas for the Norwegian Continental Shelf.

The possibilities of creating a value chain for CO_2 by using it with enhanced oil recovery (EOR) in the NCS oil fields were investigated in reports prepared by Gassco, Gassnova and Petoro in 2006 and Statoil and Shell in 2007.[7] The reports concluded that the business drivers for EOR were not sufficient to further mature the targeted fields due to the high investment cost related to installing CO_2 handling facilities at existing

[7] http://www.shell.no/home/content/nor/aboutshell/media_centre/news_and_media_releases/2007/news/ http://odin.dep.no/oed/norsk/dok/andre_dok/rapporter/026031-220017/dok-bn.html

offshore installation. The fields evaluated in the above mentioned studies have passed the window of opportunity for CO_2-based EOR.

In 2008 Gassco carried out an open season process to identify other CO_2 sources that could feed into the planned CO_2 pipeline from Kårstø. A group of nine private companies financed a mapping study of possible CO_2 transportation to Kårstø to feed into a CO_2 pipeline, and pipeline as well as ship transportation was studied. None of the identified sources for CO_2 have matured possible carbon capture projects further, and there is currently no business driver for continuing this work.

Subsequently, the work towards an investment decision for the Kårstø project has been funded by the Norwegian Government. Norway is not a member of the EU, hence the Norwegian CCS projects are not eligible for EU funding. The use of state aid to fund the development of CCS projects has been accepted by the European Fair Trade Associate (EFTA) Surveillance Authority (ESA), which monitors compliance with EU competition rules.

6.2 Commercial model for the execution of the Kårstø project

To which extent a decision to develop any CO_2 capture facility at Kårstø will be made, is still uncertain. The Norwegian Government has published a white paper on full scale CCS [*St. Mld* 9] stating that technology qualification will be carried out prior to further development of any of the CCS projects being executed. The health risks of amines released to air in the proposed technologies is a major contributor to the decision by the Norwegian authorities to postpone the investment decision on the Mongstad CO_2 capture project. In parallel Gassnova is requested by the ministry to identify alternative technology for CO_2 capture.

At Kårstø, uncertainties regarding the utilisation of the power plant and the life expectancy of the adjacent gas processing plant are factors which also come into play.

If CO_2 capture for the Kårstø project is realised, the transportation of CO_2 may be organized similar to the Norwegian upstream gas transportation. An open season could identify potential users with a need for transportation of CO_2 to a storage location. If shippers reserve and commit to pay for (on a “ship or pay” basis) sufficient capacity, a tariff could be set giving pipeline investors a defined return on their investment. This could be done through regulations from the ministry, i.e. regulated third party access. The risk of the investment will thus to a large extent remain with the shippers. Subsequent need for transportation will be dealt with in compliance with third party access rules in accordance with EU and national legislation. To what extent the Norwegian State will need to be an investor in transportation infrastructure is an open question.

The Kårstø project will not alone be sufficient to be considered for EOR purpose. The European test case described later in this work package will discuss potentials to connect the Kårstø CO_2 CCS project to other potentially available CO_2 sources.

7 CONCLUSIONS AND RECOMMENDATIONS

In this report, a specific case study related to transport of CO_2 from Kårstø is described. The case is used to illustrate technical solutions and associated costs. The results from the report are valid for this particular case, but may also give a good indication of how systems and costs will turn out to be for similar systems.

Both pipeline and ship transport is evaluated in the case study. Both concepts are assumed feasible for its purpose, but some issues remain subject to a technology qualification process, either as part of a future project, or as part of the R&D activities currently ongoing for CCS. For offshore pipeline transport, this is in particular related to noise reduction for depressurisation systems, corrosion effect of impurities in the CO_2 stream and the risk of propagating longitudinal fractures. For ship transport, a technical solution for offshore offloading needs to be qualified.

All of these issues are assumed to be manageable, and they do not represent potential showstoppers for transport of CO_2.

Pipeline transport of CO_2 will to a large extent be performed by similar pipeline systems that are already available for gas and oil transport. Also for transport of hydrocarbons, control of water and impurities is important, but for CO_2 transport, this issue is in particular essential, since the mix of CO_2 and free water will form an acid that will have a fatal corrosive effect on the pipeline material within short time. Using materials resistant to such corrosion will multiply the costs of the pipelines many times, and is not an economically feasible solution. Thus, control of the level of water and other impurities which may add to the corrosive effect is particularly important, compared to pipeline transport of gas and oil.

Ship transport of CO_2 is a mature business, up and running for almost 20 years in small scale within the food industry. Technology for scaling up to large scale transport vessels is considered available.

In the Kårstø case, NPV unit costs for transportation of CO_2 range from 14 to 28 €/tonne CO_2. For the low volume alternative, as illustrated in the cost summary in the below figure that the ship alternative is more favourable to the pipeline alternative, while for the higher volume alternatives, pipeline transport will have a lower unit cost than ship transport. This supports the general assumption that higher volumes and short distances in general favour pipeline transport, while smaller volumes and longer distances favour ship transport. In general the figure also illustrates the general assumption of economy of scale, where larger volumes in general result in lower unit costs.

It should be noted that liquefaction and compression is included in the transportation cost estimates in this report.

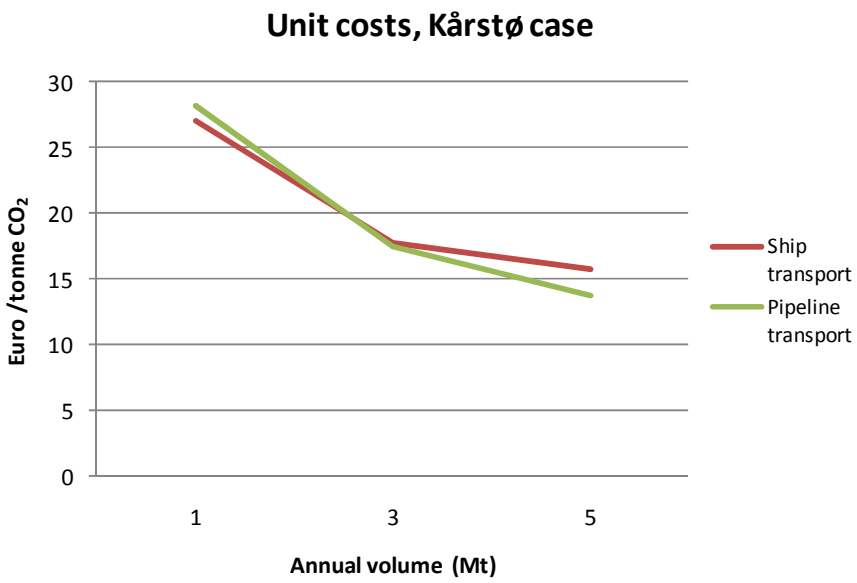

Figure 7-1 Unit cost summary, Kårstø case

Further work related to pipeline and ship transport needs to close the technology gaps described in this report. Most of the issues are also solvable by adding margins in design, related to operational requirements. Such margins have, however, a tendency of adding costs to the technical solution, and CCS in general, including CO_2 transport, needs reductions in the overall costs to be a attractive alternative for the industry and for authorities. Thus, focus should be put on technology qualification to ensure safe and cost efficient future CO_2 transport solutions.

7.1 Recommendations

Offshore pipelines for CO_2 transport can be installed and put in operation based on existing technology. Some issues remain to be solved to reduce uncertainty, in particular related to corrosion effects from impurities in the CO_2 stream, accuracy of simulation tools, use of soft materials, noise levels during depressurization and risk of longitudinal fractures. Such uncertainties may, with current technology, be handled by applying a conservative design, which can be expected to imply increased costs. It is recommended to continue focus on R&D activities for these issues to gain sufficient knowledge to optimise design and costs.

Transporting CO_2 by ship to onshore offloading is feasible based on existing technology. Some issues related to offshore offloading remain to be developed and tested. It is recommended that a technology qualification process should be performed, e.g. as part of a demonstration project, to demonstrate a reliable solution.

No CO_2 capture projects except the Norwegian government sponsored Mongstad and Kårstø cases described herein have been matured to a level necessitating terms and conditions for transporting the CO_2 in pipelines or on ships. Hence commercial terms

for the Kårstø case have not been developed. One possible model would be to implement the Norwegian upstream natural gas transportation regime for transportation of third party CO_2.

8 REFERENCES

[D2.2.1] CO2Europipe, Development of a large-scale CO2 transport infrastructure in Europe: matching captured volumes and storage availability, CO2Europipe consortium, April 2011.

[D3.1.1] CO2Europipe, Transport network design and CO2 management, CO2Europipe consortium, July 2011.

[D3.1.2] CO2Europipe, CO2 quality requirements, CO2Europipe consortium, July 2011.

[DNV I] *Project Specific Guideline for Safe, Reliable and Cost-Effective Transmission of CO_2 in Pipelines*, DNV Energy Report Reg No.: 2009-0545, Rev 0, 2009 – Restricted distribution

[DNV II] *DNV-OS-F101 Submarine Pipeline Systems*, DNV Offshore standard, 2010

[St. Mld 9] Norwegian White Paper on full scale CCS, St Mld. no. 9 (2010-2011) "Fullskala CO2-håndtering"

A1 DESIGN BASIS, FUNCTIONAL AND OPERATIONAL REQUIREMENTS FOR THE KÅRSTØ CASE

This section defines the design basis as well as the functional and operational requirements for the Kårstø case (the CO_2 transportation system from the Kårstø CO_2 capture plant to the storage site) in WP4.3 in the CO2EuroPipe project. The principles in this document is also intended to be used as a basis for the European case within WP4.3 to be detailed later in the project.

A1.1 BATTERY LIMITS

Battery limits are defined upstream and downstream of the pipeline system, i.e. at Kårstø and at the Utsira formation.

A1.1.1 Kårstø

The battery limit between the upstream facilities and transport facilities at Kårstø is at the flange downstream of a metering system and shutdown valve at the source of the CO_2. Pipeline equipment (pig launcher, emergency shut-down valve, vent line, monitoring and control facilities, etc) is part of the CO_2 pipeline system. Functional requirements to pipeline related facilities/equipment at Kårstø, including facilities upstream of the battery limit are described in Section A1.3 below.

A1.1.2 CO_2 storage location at Utsira

The exact coordinates for the location used in the Kårstø project by MPE are confidential. However, for the CO2EuroPipe Kårstø case, it is assumed to be in the region 7 km west of the Draupner S/E platforms, approximately 240 km west of Kårstø.

The battery limit between the transportation facilities and the storage/injection facilities at the template is at the weld between the pipeline tie in spool and the upstream connector hub at the template as shown in the figure in Section A1.1. Functional requirements to pipeline related facilities/equipment downstream of the battery limit are described in Section A1.3.2 below.

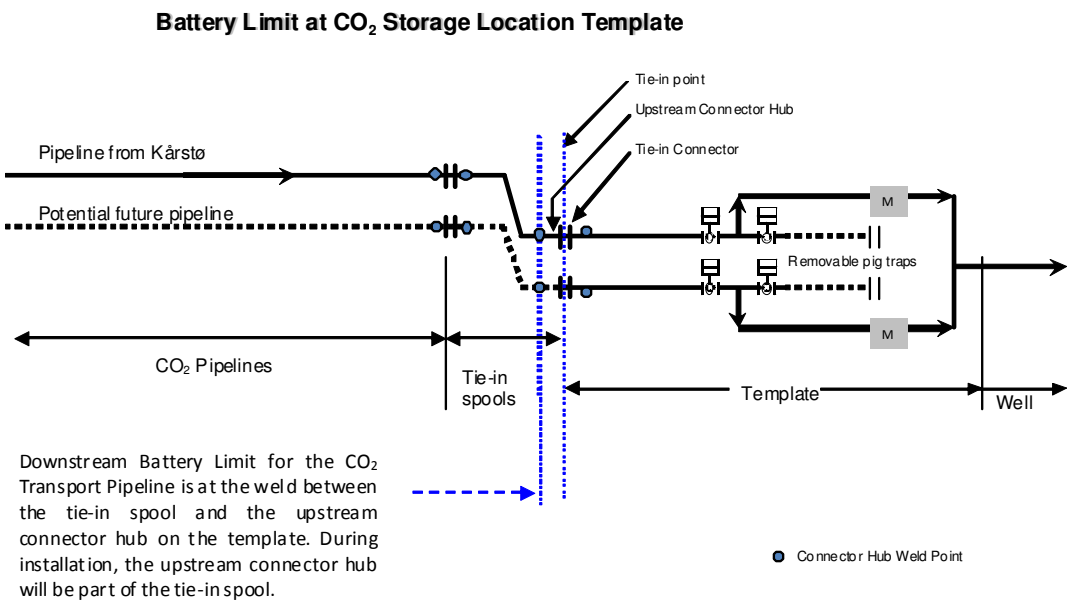

Figure A-1 Battery limit at the Utsira template

A1.2 DESIGN PREMISES

A1.2.1 Design flow rate

CO_2 design flow rates from Kårstø:

- 1 Mt/yr à 125 t/hr
- 3 Mt/yr à 375 t/hr
- 5 Mt/yr à 625 t/hr

It is assumed that the period of use for the pipelines will be 8000 hr/year.

A1.2.2 CO_2 product and transport specifications

The CO_2 quality design transport specification, i.e. the composition of the CO_2 stream, is developed as part of other parts of the CO2Europipe project [*D3.1.*2]. Functional requirements related to this specification are:

- Impurities shall be dissolved in the CO_2 at all pressures and temperatures within the pipeline
- The combinations of CO_2 and impurities in the comingled stream shall be non-corrosive for all possible operating conditions of the CO_2 in the pipeline.

This also means that the content of H_2O in the CO_2 stream should be such that free water is not allowed to form, even under blow down conditions, where low pressure and temperature may be present.

The integrity of the pipeline may be at risk (such as severe corrosion attack) if sustained operations are carried out with some components at a higher level than specified, such as water or oxygen.

In addition, impurities can have a negative impact on transport capacity and can also significantly change the phase diagram for the transport medium, which should be taken into account for flow analyses.

A real time monitoring system for product quality shall be provided, linked to alarm and manual and/or automatic shut-in of the pipeline as required preventing off-spec CO_2 to enter the pipeline.

A1.2.3 Design temperature and pressure

The design temperatures (min /max for normal operations) are given as -20/+50°C. This corresponds to requirements e.g. for a typical gas pipeline. Design pressure is given as max 250 barg at MSL.

Definition of design pressure is normally the result of a cost benefit analysis, where the cost of increased steel quantities as a result of higher wall thickness is compared towards the decreased steel quantities as a result of reduced pipeline diameter is evaluated for higher design pressure alternatives. In this case, an extensive cost benefit analysis has not been performed, but experiences from similar projects have been used to arrive at a likely beneficial pressure rating of the pipeline.

The maximum operational pressure is defined as the design pressure less a minor margin.

A 10 bar margin to two phase flow is to be maintained at all times and locations during normal operating conditions. According to the thermo-hydraulic analysis this is ensured by fixing the well head pressure at 53 barg (or above) at Utsira by implementing a down-hole choke.

A1.3 FUNCTIONAL REQUIREMENTS

The function of the CO_2 transport pipeline is to transport CO_2 from Kårstø to a sub-sea template for injection and storage.

Normal operation is defined as all operating conditions when CO_2 is transported from the Kårstø to the storage site according to the needs for transportation, all operating conditions when the flow has been stopped for reasons not related to the pipeline and the pipeline is ready to resume operation (e.g. shutdown of power plant/capture plant), and all transient conditions between these different flow conditions. It is required that

the CO_2 shall be maintained in single (dense or liquid) phase throughout the pipeline in all normal operating conditions.

The pipeline shall be designed to withstand all foreseeable conditions during normal operation, including low temperature effects.

Abnormal operating conditions shall also be addressed; such as blow-down and leak/rupture conditions. While some un-normal operating conditions, such as a large leak, may result in effects which are outside the basis for normal operation, it is required that un-normal operations which can be controlled, such as blow-down for release of the pipeline contents to the atmosphere, shall be controlled by procedures to be developed to prevent exposure of the pipeline to unacceptable conditions.

The pipeline and pipeline facilities shall be designed for reliable and safe operation over the lifetime, and protection of the public, the environment and commercial values against effects of possible incidents.

Coordination of operations at Kårstø and Utsira is necessary to ensure appropriate pipeline safety. Such coordination shall be performed from a central control centre.

A1.3.1 Upstream pipeline facilities

The facilities at the Kårstø end shall include:

- Permanent pig launcher and receiver facilities for RFO and inspection
- Emergency Shut-down (ESD) system, primarily to isolate the subsea pipeline from the onshore facilities. Location either near the pigging facilities or at the landfall.
- Blow down system to safely evacuate the contents of the pipeline. Shall be operational for the offshore pipeline also if the ESD valve is closed. Possibly a separate blow-down system for the onshore pipeline (if ESD valve at the landfall)
- Control equipment for normal pipeline operation, such as block valve to trap contents in shut-in situations and control valve for re-start from shut-in conditions.
- Instrumentation for monitoring of pressure, temperature and for leak detection, linked to the pipeline control centre.
- A real time monitoring system for product quality, linked to alarm and manual or automatic blocking of flow into the pipeline in off-spec situations.
- Utilities as required to serve the above functions

Facilities for metering as part of leak detection and monitoring of product quality are included as part of the relevant capture plant(s) system to ensure production of CO_2 according to required specifications.

A1.3.2 Downstream pipeline facilities

The facilities at the downstream end (on the sub-sea template at Utsira) shall include:

- Removable (for template) pig launcher and receiver facilities for RFO and inspection.
- Emergency Shut-down (ESD) system, primarily to isolate the sub-sea pipeline from the downstream facilities.
- Control equipment for normal pipeline operation, such as block valve to trap contents and control valve in shut-in conditions for re-start from shut-in conditions
- Instrumentation for monitoring of pressure, temperature and for leak detection, linked to the pipeline control centre. May be combined with well control instrumentation.
- Utilities as required to serve the above functions

All facilities are downstream of the pipeline battery limit, and will for the sub-sea template alternative be integrated on the template with facilities for well operation and control. Functional requirements for the pipeline related facilities shall be established for as part of Utsira template and well engineering, ref. battery limits in the figure in Section A1.1.

A1.3.3 Regularity

Terms and definitions used to measure regularity should be based on the NORSOK standard [*NORSOK*].

The regularity evaluations shall provide estimates for the regularity of the respective options. No specific target is set. However, the pipeline system (export facilities and transport pipeline) should not be a major contributor to reduced regularity for the CO_2 capture and deposit chain.

The requirement/target for the export, transport and injection chain should reflect the actual importance of high regularity for handling of the CO_2 captured.

A1.3.4 Design life

The design life of the pipelines, tie-in spools and subsea structures shall be 50 years from installation.

A1.4 OPERATIONAL REQUIREMENTS

A1.4.1 Health, Safety, Security and Quality

General

Safety of personnel and equipment and the protection of the environment are of paramount importance in all aspects of operation of the systems. Accordingly, health, environment, safety and security (HSE) requirements will be implemented at all operated facilities and will be managed via requirements as laid down in relevant management system.

A total risk analysis for the systems shall be available. It should be updated according to established requirements.

HES & Q management system
The CO_2 pipeline will satisfy the requirements of the relevant management system concerning HSE during design, construction, commissioning and start-up, and eventually in operation. These requirements will include, but shall not be limited to safe and reliable operation, permit to work, quantitative risk assessments and individual risk analysis for the wide range of tasks and procedures for operations shall reflect best industry practises.

Emergency Procedures
Emergency procedures shall be readily available and shall cover all aspects of emergency shutdowns, power and services failure, fire, explosion and catastrophic failure (e.g. pipe rupture, loss of containment).

A1.4.2 Environment

All the facilities included in the CO_2 Transportation Network will comply with all statutory directives related to emissions and discharge(s) and solid waste handling/intermediate storage notification schemes.

Any potential for release of hazardous (or toxic) gases will be strictly controlled during any transportation (and maintenance) operations by use of controlled operational procedures.

A1.4.3 Operations

Operating Guidelines for the CO_2 Transportation Network
This section gives a brief overview of the operating guidelines for the transportation system. Quantity and quality received by and injected from the CO_2 Transportation Network shall be within transport specifications.

Normal operating procedures are derived from the following priorities (not in hierarchical order):

- The integrity of the pipeline shall never be jeopardized.
- Venting must be minimized (environmental pollution).
- Smooth operation should be maintained at both the Capture Plant(s) and the CO_2 Transportation Network.

Taking into account these priorities, the CO_2 Transportation Network undertake to receive the CO_2, transport and deliver it to Storage.

The operation of the CO_2 Transportation Network will be monitored and controlled from a Transport Control Center. The monitoring will be according to operating procedures, which will be developed in cooperation with the Capture Plant(s) and storage Operators.

These procedures shall comprise operating conditions for the pressure, temperature, flow, composition, content of H_2S, O_2 and other impurities and the Capture Plant(s) must include defined controllable margins to the CO_2 Transport specification values.

The CO_2 Transportation Network will at all times be operated in such a way that two-phase flow in any part of the system will be avoided.

Flow variations resulting from variations in output from the CO_2 source(s), including no flow, are considered normal operating modes, and the transport system should be designed to handle such operating modes.

Methods controlling and monitoring of well flows must be implemented to avoid CO_2 flowing back from the well to the pipeline.

To perform leak detection of the pipeline system, a computerised online leak detection model will be established and will use above mentioned monitored data from all relevant sites as input.

Operating Procedures

The CO_2 Transportation Network Operator shall operate the CO_2 Transportation Network with due regard to operational tolerances and sufficient working quantity of CO_2 in the pipeline. The CO_2 Transportation Network Operator will in cooperation with all interface parties develop interface- and operational procedures/agreements.

This will include:

- Planning, dispatching and reporting
- Capacity reservation rules, if tie-in of potential future 3rd party access
- Variation in flow rates
- Survival time in case of unplanned events at the Capture Plant(s) or the Storage
- Right quality
- Metering/metering deviations
- Unplanned maintenance in the CO_2 Transportation Network and/or adjacent systems
- Yearly planned maintenance programme/unplanned maintenance
- Pipeline start-up, normal operation and shutdown situations
- Capacity tests
- Energy optimisation
- Emergency conditions/leak detection
- Blow down of pipeline
- Loss of communications
- Special coordination procedures
- Pigging operations

Product specification quality control
The CO_2 specifications shall include the required product specifications this is to be continuously monitored by means of permanently installed gas analysis equipment. Spot-check CO_2 sample testing may also be required to verify the on-line equipment.

The principle for instruments and analysers are duplicated equipment.

Metering stations
The metering and the analysis of the CO_2 being sent in the pipeline shall meet the requirements outlined in the EU legislation for carbon capture and storage. This requires an analysis of the composition, including corrosive substances. As of today there is only a provisional edition, and the associated guidelines are not written yet. Therefore the uncertainty requirements as detailed by EU [*EC I*, *EC II*] for gas emissions are temporarily used as requirements. As the expected quantities is rather pure CO_2 (99.6%), these documents specify that the total maximum uncertainty of CO_2 determination in mass shall be less than +/- 1.5 %.

A1.4.4 Maintenance

The CO_2 Transportation Network Pipeline is designed to facilitate no maintenance on a regulate basis. If conditions' necessitating repairs or the need for other intervention work is discovered, the appropriate authorities will be informed of the finding and of the proposed remedial work. This will include stationing a guard vessel in the area if this is considered necessary.

Pipeline integrity management.
The Pipeline integrity management system for the CO_2 Transportation Network shall have focus on the following key integrity areas:

- Pipeline safety systems and operation
- Pipeline external inspection
- Corrosion management
- Modification and repair management.

The work process shall follow the four phases plan, do, check and improve as outlined in relevant standards.

Pigging
The CO_2 Transportation Network pipeline will be designed to cater for maintenance and inspection pigging from Kårstø to storage site.

The need for and the frequency of cleaning pigs shall be based upon the operating conditions of the pipeline. Increased pressure drop, potential accumulation of liquids / debris together with the handling capability at the receiving end shall be used to decide if it is necessary to send cleaning pigs. These parameters shall be carefully monitored especially after connecting branch lines to existing pipelines, after significant changes in supply operations and when taking potential new lines into operation.

A1.5 STUDY ASSUMPTIONS

A1.5.1 Design parameters for hydraulic calculations

CO_2 density is assumed minimum 750 kg/m³ and maximum 1050 kg/m³. CO_2 dense phase flow is to be maintained under all normal operating conditions, i.e., two phase flow must be avoided. The calculation method must be able to determine two-phase flow conditions. Overall heat transfer coefficient offshore pipeline must be calculated. Parameters for hydraulic calculations are given in the below table.

Table A-1 Parameters for hydraulic calculations

Description	Value	Unit
Ambient seabed mean temperature	7	ºC
Highest monthly mean seabed temperature	9	ºC
Lowest monthly mean seabed temperature	4	ºC
Pipeline internal roughness	50 [8]	µm
Reservoir pressure for Utsira	95 [9]	bara

A1.5.2 Pipeline and coating details

The CO_2 pipeline shall be externally coated to prevent external corrosion. The proposed pipeline coating data is shown in the below table.

Table A-2 External pipeline coating

Description	Layer Thickness [mm]	Density [kg/m³]	Thermal Conductivity [W/mK]
FBE	0.3	1450	0.3
PP adhesive and shield [10]	2.7	900	0.23

The pipeline shall ideally be coated internally to provide corrosion protection prior to installation and allow for flow improvement. However, such a flow coating needs to be qualified for the CO_2 service and resistance to wear by pigging. In a recommended practise for CO_2 transport, DNV does not recommend using internal coating due to possible detachment during depressurisation, see [*DNV III*]. Thus, based upon our current knowledge flow coating is not recommended to be used inside the pipeline.

A1.5.3 Spool piece bends

Bend radii are shown in the below table.

Table A-3 Bend radiuses

[8] With no internal coating an internal roughness of 50 µm should be applied.

[9] Depth of well below MSL: 958 m and reservoir temperature 35 ºC

[10] If PP does not satisfy low operating temperatures other alternatives might be considered e.g. PE

Min 5D bends
Min 2D straight run between 90 deg bends in one plane
Min 3D straight run between bends in two planes
Min 3D straight run between barred Tee and bend

The bend radii shall be measured at the centre line of the bend. Tangent length is required at each end of the bend. The required bend wall thickness is the wall thickness after the pipe is bended, i.e. bend mother pipe wall thickness has to be greater than the required bend wall thickness.

A1.5.4 Valves and branches

All block valves shall be full bore valves and branches larger than 40% ID shall be barred. Water hammering is not expected as compressibility is high.

A1.5.5 Pipeline material selection

Base case pipeline material is seamless carbon steel SML 450 I SFPD. If this design result in a hoop stress capability exceeding 250 barg design pressure, lower yield material or higher design pressure shall be considered. Line pipe specification shall take into account possible low operating temperatures and other effects of CO_2.

A1.5.6 Special design requirements for CO_2 service

Fracture properties:
The pipeline design should account for the special properties of CO_2 with respect to the susceptibility to running ductile fractures. In case engineering analysis demonstrates unacceptable risk related to fracture properties, crack arresters or other measures shall be incorporated into the design.

Material choice:
All materials and equipment must be capable of handling dense phase CO_2. Special care must be taken that lubricants, gaskets and sealants in the equipment are resistant over time. Resilient material shall be resistant to explosive decompression.

Line segments and pipeline components may during normal or certain un-normal operating conditions locally reach particularly low temperatures. In such cases (not including large leak/rupture) it shall be considered to specify a lower design temperature for these segments or components than for the rest of the pipeline.

Block valves: maximum opening and closing times must be specified.

Depressurization and venting:
Facilities must be included in the pipeline design to allow for safe venting and depressurization of the pipeline. The blow down/venting facilities need to be at a safe location. Monitoring equipment need to be included to warrant safe depressurization of the pipeline, including temperature monitoring and control of pipeline components and local ambient CO_2 concentrations.

Noise control during venting must be implemented to allow safe venting without the risk of hearing damage.

Pigging:
Pigging facilities must be included to allow for dewatering and inspection pigging. This includes an onshore upstream pig launcher\receiver and downstream subsea pig launcher\receiver for the Utsira. The low lubricate properties of CO_2 should be accounted for in the design of pigging equipment as well as the requirements of material compatibility with dense phase CO_2.

Monitoring and control:
At the entry to the pipeline a monitoring system must be included comprising compositional and water contents measurement of the CO_2 entering the pipeline. This has to be part of a control system incorporating a block valve at the battery limit isolating the pipeline from the capturing facilities when the fluid specification for the CO_2 is exceeded.

A1.5.7 Corrosion allowance

No corrosion allowance is included in pipeline design. The rationale for this is that it is critical that the CO_2 stream under any circumstances is non-corrosive, and that strict measures are implemented to ensure this. If the stream becomes corrosive, corrosive rates for a CO_2 stream will be so high that any normal corrosion allowance (e.g. 3 to 5 mm extra wall thickness) will not be sufficient to prevent fatal damage over the lifetime of the pipeline.

A1.5.8 Installation methods

The design shall provide flexibility with respect to installation methods where applicable, and in particular allow methods based on reverse plastic bending of the pipe during installation for pipeline diameters allowing this installation method.

A1.5.9 Protection requirements

The pipeline shall be protected against third party loads in all areas where such loads otherwise would pose an unacceptable risk i.e. trenching and possibly backfilling in trawling areas and other protection such as gravel dump, protection covers, mattresses, to be used as required.

Protection against environmental loads as required.

A1.6 ALTERNATIVE CO_2 TRANSPORTATION BY VESSEL

Base case for ship transport of CO_2 is the same volume basis as for the pipeline alternative, i.e. 1, 3 and 5 Mt/yr. In addition, an alternative where CO_2 from a different source (Mongstad) is transported to Kårstø will be analysed.

A1.6.1 Scope specification

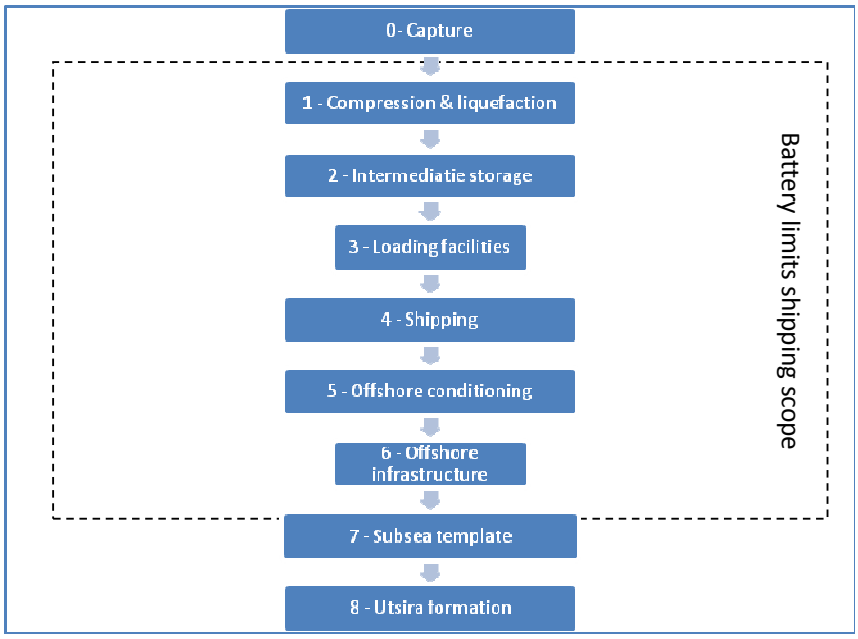

Figure A-2 Scope definition needed for ship transportation. Source: Anthony Veder

The shipping scope consists of 6 steps. The battery limit for the shipping scope starts at the exit flange of the capture plant and ends at the subsea template. The following steps are defined as part of the shipping scope:

1. CO_2 has a significant volumetric transportation efficiency when transported in liquid phase. The weight / volume ratio of the liquid CO_2 is more suited to transportation in a ship, then in gaseous phase. The captured CO_2 will be liquefied, which means that a liquefaction plant is required at the capture site.
2. Technologies for liquefaction of CO_2 vary, but it is (process) industry practice to perform a dehydration step of the captured CO_2 – H_2O content. The reason for the dehydration is to avoid carbonic acid formation, which is highly undesirable in a metallurgic environment. The liquefaction process itself will then knock out most of the impurities. Since the CO_2 is relative dry and pure, existing thermodynamic knowledge of CO_2 can be used in models. The conditions of the CO_2 after liquefaction are assumed to be -55 °C and 7 barg. As in the pipeline case it is assumed that the CO_2 stream in the shipping transportation chain is non-corrosive.
3. After liquefaction, intermediate storage is required at the capture site due to the batch wise nature of seaborne transportation therefore allowing for time efficient loading of the CO_2 carrier.
4. Preferably near the capture and intermediate storage location the jetty with the loading facilities: at least 2 loading arms are required (1 for cargo flow, 1 for the vapour return).
5. Vessel transportation of CO_2 in cargo containment system onboard a (seagoing) vessel from port to port or from port to offshore discharge location.

6. Conditioning of the CO_2 onboard prior to injection to allow for injection into the well within the working limits as set by the well owner or operator.
7. Offshore infrastructure that allows the vessel to connect to the subsea template / completion that is in turn connected to the well head.

A1.6.2 Assumptions

All the relevant assumptions used for the pipeline solution are the same except for the following parameters:

- Alternative CO_2 sources need to be selected so to build several scenario's (e.g. Mongstad)
- Specifications of the captured CO_2 can be of a different quality than the CO_2 captured at the Kårstø plant since liquefaction knocks out almost all impurities
- After liquefaction the CO_2 is stored at an intermediate storage site at -55°C and 8barg, in line with the transportation conditions onboard the CO_2 vessel
- Number of operation days 360 per year
- Distance from Kårstø to Utsira 130 nautical miles (240km)
- CO_2 density is set at 1.13t/cbm

A1.6.3 Vessel specifications

- Size of the vessels is a function of the CO_2 volume, the distance over which it is to be transported, the vessels speed and loading and discharge rates – this is also the case for the sizing of the intermediate storage capacity
- Vessel speed is tbd upon clarity on distance in correlation with the alternative captured CO_2 volume scenarios mentioned above though assume 14 to 16kts of transit speed
- 360 days operational
- Economic lifetime of vessel 25 years
- Discharging possible up to 7 Beaufort
- Vessel shall be compliant to all regulations applicable to its class and the operations under consideration, this includes any safety, health and environmental regulations and directives applicable
- Emergency procedures shall be present and cover all instances of emergency (ie emergency shutdown, power and service failure, fire, explosion), as such control of the valves at the injection template have to be controlled from the vessel in the case of offshore discharging.

A1.6.4 Offshore discharging infrastructure

The different scenarios demand different sized vessels, as such setup, dimensioning and design of the offshore discharging infrastructure will vary accordingly just as the sea states that occur around the Utsira saline formation – specific metocean data is needed here in order to achieve a higher level of design detail.

A1.7 References in Appendix

[D3.1.2] CO2Europipe, CO2 quality requirements, CO2Europipe consortium, July 2011.

[NORSOK] *Regularity management & reliability technology*, NORSOK Standard Z-016 Rev. 1, December 1998

[DNV III] *Project Specific Guideline for Safe, Reliable and Cost-effective Transmission of CO_2 in Pipelines*, August 2009

[EC I] DIRECTIVE 2003/87/EC OF THE EUROPEAN PARLIAMENT AND OF THE COUNCIL, of 13 October 2003, establishing a scheme for greenhouse gas emission allowance trading within the Community and amending Council Directive 96/61/EC

[EC II] COMMISSION DECISION, of 18 July 2007, establishing guidelines for the monitoring and reporting of greenhouse gas emissions pursuant to Directive 2003/87/EC of the European Parliament and of the Council